European Network of
Transmission System Operators
for Electricity

# Network Code for HVDC Connections and DC-connected Power Park Modules

# Frequently Asked Questions

7 November 2013

**Disclaimer:** This document is not legally binding. It only aims at clarifying the content of the draft Network Code for "HVDC Connections and DC Connected Power Park Modules". This document is not supplementing the final network code nor can be used as a substitute to it.

ENTSO-E AISBL • Avenue de Cortenbergh 100 • 1000 Brussels • Belgium • Tel +32 2 741 09 50 • Fax +32 2 741 09 51 • info@entsoe.eu • www.entsoe.eu

## Content





ENTSO-E AISBL • Avenue de Cortenbergh 100 • 1000 Brussels • Belgium • Tel +32 2 741 09 50 • Fax +32 2 741 09 51 • info@entsoe.eu • www.entsoe.eu

# Frequently Asked Questions

## On the general Network Code development and application:

1. What are the "cross-border network issues and market integration issues"?
2. What is the relationship between the framework guidelines and network codes – what are the responsibilities of both and what is the process of network code development?
3. How does this Network Code link to other codes on connection, operation and market integration?
4. Does the network code apply to links within or connecting to non-EU member states?
5. How are other parties in the industry consulted?
6. What is the role of the subsidiarity and proportionality principle in the NC HVDC?
7. Why does the network code not provide for dispute resolutions?
8. How does a NC on HVDC connection rules relate to equipment standards and planning standards?

## On the main principles of the NC HVDC:

9. What is the appropriate level of detail and harmonization of the network code?
10. Why does the network code not define certain requirements as paid-for ancillary services?
11. Do the requirements have to be considered as "minimum" or "maximum" requirements; what is the understanding of "minimum"/ "maximum" requirements?
12. Which terminology is used in this code, and how does it relate to that in other Network Codes, national codes and standards?
13. Why does the code not make a distinction between LCC and VSC technology?

## On the scope of the NC HVDC:

14. Who does the code apply to, at which point, and why?
15. How does the code impact existing HVDC systems?
16. Why are some generators covered by the NC RfG and some by the NC HVDC?
17. How are multi-terminal connections and meshed DC grids covered by the code? Is there a roadmap for future amendments of the NC HVDC?

## On specific general requirements that deserve further attention:

18. How should the combined effect of frequency and voltage ranges be interpreted?
19. Why do HVDC systems have stronger frequency/voltage withstand capabilities than generation and demand?
20. How can an interconnector provide frequency support, including inertia and even contribute synchronising torque?



ENTSO-E AISBL • Avenue de Cortenbergh 100 • 1000 Brussels • Belgium • Tel +32 2 741 09 50 • Fax +32 2 741 09 51 • info@entsoe.eu • www.entsoe.eu

21. What does fault-ride-through mean for an HVDC connection and how should the requirement be interpreted?
22. Which reactive power requirements does the NC HVDC set on HVDC connections?
23. How can the interaction between HVDC Converters and other elements of the grid be addressed?
24. Why is power quality included in this code and why is the HVDC Connection Code not specifying the standards for Power Quality?
25. Why is data model exchange essential?

## On DC connected generation:

26. Why does the NC HVDC allow for different requirements compared to those in NC RfG?
27. Which design requirements apply to the AC collection Network of a DC-Connected Power Park Module ?
28. What happens in case the HVDC System is owned and/or operated by another party than the onshore TSO and the offshore wind farm(s)?

As used in this paper, the capitalized words and terms have the meaning ascribed to them in the draft NC HVDC.



ENTSO-E AISBL • Avenue de Cortenbergh 100 • 1000 Brussels • Belgium • Tel +32 2 741 09 50 • Fax +32 2 741 09 51 • info@entsoe.eu • www.entsoe.eu

## Answer to FAQ 1:

**What are the "cross-border network issues and market integration issues"?**

Regulation (EC) 714/2009 Article 8 (7) defines that "the network codes shall be developed for cross-border network issues and market integration issues and shall be without prejudice to the Member States' right to establish national network codes which do not affect cross-border trade".

The terms "cross-border network issues and market integration issues" are not defined by the Regulation. However, ENTSO-E's understanding of the terms has been derived from the targets of the EC 3rd legislative package for the internal electricity market:

- supporting the completion and functioning of the internal market in electricity and cross-border trade
- facilitating the targets for penetration of renewable generation
- maintaining security of supply

Based on these targets and in the context of the network codes for grid connection, the following interpretation of the terms "cross-border network issues and market integration issues" has been taken as a guiding principle:

The interconnected transmission system establishes the physical backbone of the internal electricity market. TSOs are responsible for maintaining, preserving and restoring security of the interconnected system with a high level of reliability and quality, which in this context is the essence of facilitating cross-border trading.

The technical capabilities of the users play a critical part in system security. TSOs therefore need to establish a minimum set of performance requirements for generators connected to their network. The performance requirements include robustness to face disturbances and to help to prevent any large disturbance and to facilitate restoration of the system after a collapse.

Secure system operation is only possible by close cooperation of grid users connected at all voltage levels with the network operators in an appropriate way, because the system behaviour especially in disturbed operating conditions largely depends on the response of grid users in such situations. With respect to system security the transmission system and the grid users need to be considered as one entity. It is therefore of crucial importance that grid users, incl. HVDC Systems and DC-connected Power Park Modules, are able to meet the requirements and to provide the technical capabilities with relevance to system security.

Moreover, harmonization of requirements and standards at a pan-European level (although not an objective in itself) is an important factor that contributes to supply-chain cost benefits and efficient markets for equipment, placing downwards pressure on the cost of the overall system.

To ensure system security within the interconnected transmission system and to provide an adequate security level, a common understanding of these requirements to power generating facilities is essential. **All requirements that contribute to maintaining, preserving and restoring system security in order to facilitate proper functioning of the internal electricity market within and between synchronous areas and to achieving cost efficiencies through harmonization of requirements shall be regarded as "cross-border network issues and market integration issues".**



ENTSO-E AISBL • Avenue de Cortenbergh 100 • 1000 Brussels • Belgium • Tel +32 2 741 09 50 • Fax +32 2 741 09 51 • info@entsoe.eu • www.entsoe.eu

## Answer to FAQ 2:

**What is the relationship between the framework guidelines and network codes – what are the responsibilities of both and what is the process of network code development?**

The relationship between framework guidelines and network codes as well as the process for the establishment of network codes are defined by Article 6 of Regulation (EC) 714/2009.

The Agency for the Cooperation of Energy Regulators (ACER), on request of the European Commission (EC), shall submit to EC, within a reasonable period of time not exceeding six months, a non-binding framework guideline. This framework guideline will set out clear and objective principles for the development of network codes, covering cross-border network issues and market integration issues relating to the following areas and taking into account, if appropriate, regional specificities:

- network security and reliability rules including rules for technical transmission reserve capacity for operational network security;
- network connection rules;
- third-party access rules;
- data exchange and settlement rules;
- interoperability rules;
- operational procedures in an emergency;
- capacity-allocation and congestion-management rules;
- rules for trading related to technical and operational provision of network access services and system balancing;
- transparency rules;
- balancing rules including network-related reserve power rules;
- rules regarding harmonized transmission tariff structures including locational signals and inter-transmission system operator compensation rules; and
- energy efficiency regarding electricity networks.

Each framework guideline shall facilitate non-discrimination, effective competition and the efficient functioning of the market.

Based on such a framework guideline the EC shall request ENTSO-E to submit a network code which is in line with the relevant framework guideline to ACER within a reasonable period of time not exceeding 12 months.

If ACER assesses that the network code is in line with the relevant framework guideline, ACER shall submit the network code to the EC. The EC will then initiate the comitology process to give the network codes binding legal effect. It is likely that the network codes through the comitology process will become European Union (EU) regulations making the provisions of the network codes applicable in all Member States immediately without further transposition into national legislation.

The main objective of the framework guidelines is to highlight **which** emerging questions/problems should be solved, leaving the approaches on **how** to solve them to the related network code(s). Figure 1 provides an overview on the complete process of framework guideline and network code development.



ENTSO-E AISBL • Avenue de Cortenbergh 100 • 1000 Brussels • Belgium • Tel +32 2 741 09 50 • Fax +32 2 741 09 51 • info@entsoe.eu • www.entsoe.eu

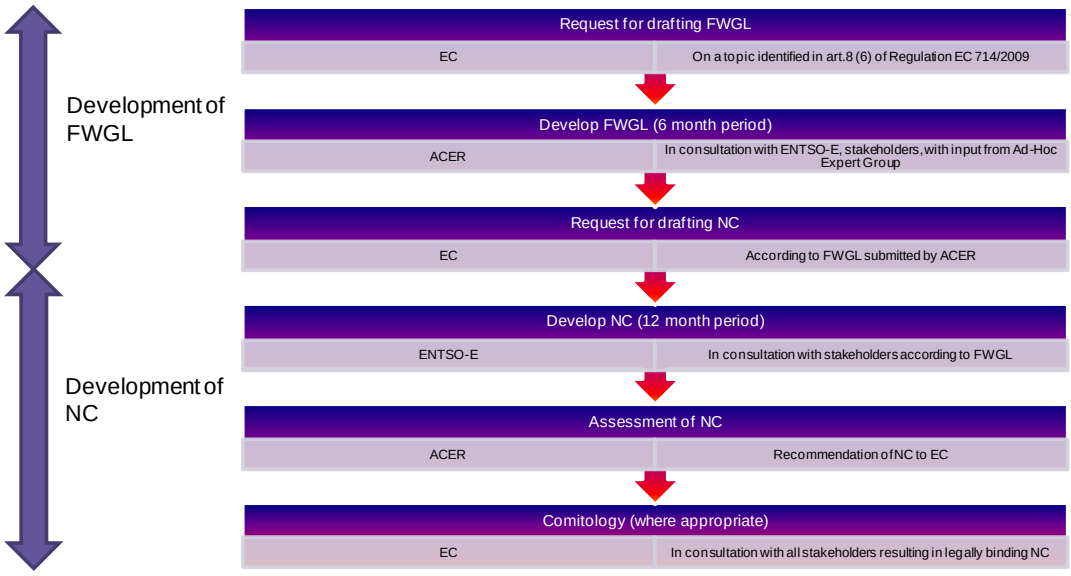


*Figure 1: Framework guideline (FWGL) and network code (NC) development process*

As reflected in the three year work program[1] which is regularly discussed by EC/ACER/ENTSO-E and consulted upon in the Florence Forum with all key stakeholders in the electricity sector, one or more network code(s) may correspond to a single framework guideline. The ACER framework guidelines on grid connections[2] were published on 20 July 2011. In total, four codes are anticipated in the coming years: connection of generation, connection of demand, connection of HVDC circuits and connection procedures. The formal twelve month mandate for the network code on HVDC connections started in April 2013, with a request to submit the NC HVDC to ACER by 1 May 2014. The two earlier grid connection codes (on Requirements for Generators, and the Demand Connection Code) are finalized by ENTSO-E, received a recommendation by ACER, and are at present being prepared by the EC for formal comitology with the involvement of Member States. For the fourth network code under these framework guidelines, regarding connection procedures, no starting date has been indicated so far.

In accordance with Article 10 of Regulation (EC) 714/2009, ENTSO-E shall conduct an extensive consultation process while preparing the network codes, at an early stage and in an open and transparent manner, involving all relevant market participants, and, in particular, the organisations representing all stakeholders. That consultation shall also involve national regulatory authorities and other national authorities, supply and generation undertakings, system users including customers, distribution system operators, including relevant industry associations, technical bodies and stakeholder platforms. It shall aim at identifying the views and proposals of all relevant parties during the decision-making process.

All output of the stakeholder interactions (bilateral meetings, workshops, user group meetings) during the formal development period of NC HVDC can be accessed on the ENTSO-E website[3].

Most recent information on the development of all NCs can be found on the ENTSO-E website[4].

---

[1] http://ec.europa.eu/energy/gas_electricity/codes/codes_en.htm
[2] http://www.acer.europa.eu/portal/page/portal/ACER_HOME/Public_Docs/Acts%20of%20the%20Agency/Framework%20Guideline/Framework%20Guidelines%20On%20Electricity%20Grid%20Connections/110720_FGC_2011E001_FG_Elec_GrConn_FINAL.pdf
[3] https://www.entsoe.eu/major-projects/network-code-development/high-voltage-direct-current/


ENTSO-E AISBL • Avenue de Cortenbergh 100 • 1000 Brussels • Belgium • Tel +32 2 741 09 50 • Fax +32 2 741 09 51 • info@entsoe.eu • www.entsoe.eu

## Answer to FAQ 3:

**How does this Network Code link to other codes on connection, operation and market integration?**

One of main principles in the development of the NC RfG, DCC and NC HVDC is the goal of a consistent set of connection requirements for new generators, demand and DC links, which take into account local system needs and inherent technical capabilities.

Whereas this code details requirements for capabilities, it does not provide answers to operational or market-related issues. These rules can be found within the operational/market network codes, notably NCs OS, LFC&R, Balancing and Emergency Response, or appropriate national rules. It also emphasized that whereas operational and market codes often reflect present needs, connection codes need to ensure future operational/market rules can be facilitated as well.

The paragraphs below describe some of the most notable interactions of NC HVDC with other Network Codes.

**NC Requirements for Generators**

NCs HVDC and RfG are closely linked in terms of various processes: national implementation, modernization, operational notification, existing users, users not yet connected, derogations.

More importantly, many of the technical requirements prescribed for DC-connected Power Park Modules are based on, and often explicitly refer to the respective requirement in NC RfG. Additional or different requirements are formulated wherever needed due to the different characteristics of the (offshore) connection point and collection network, or where the inherent capabilities of generating units connected through power electronics can be used. The delivery of certain technical capabilities can be optimised between the PPM and the HVDC link connecting the collection network to the main AC network, as described in e.g. Article 40(2). One of the key arguments for such approach has been the expectation that DC-connected collection grids may in the future be connected via AC-circuits as well (hybrid connection), in which case both RfG and HVDC would become applicable, therefore limiting the differences to wherever necessary for system characteristics is reasonable.

The requirements for HVDC systems contain similar categories as in RfG, with the additional guiding principle to ensure that HVDC links (similarly to other elements of the transmission network) are the most reliable items of the system, i.e. are the ones withstanding the widest range of parameters (voltage, frequency, etc.) in non-normal situations. This results in somewhat wider ranges to be withstood than for generators, wherever there was no prohibitive cost implication identified.

**Demand Connection Code**

NC HVDC and DCC are also closely linked in terms of general processes such as national implementation, modernization, operational notification, existing users, users not yet connected and derogations.

**NC Operational Security**

The technical capability of limiting ramp rates for frequency management reasons (as foreseen in NC OS Article 9(14)) shall be ensured by NC HVDC.

[4] https://www.entsoe.eu/major-projects/network-code-development/



ENTSO-E AISBL • Avenue de Cortenbergh 100 • 1000 Brussels • Belgium • Tel +32 2 741 09 50 • Fax +32 2 741 09 51 • info@entsoe.eu • www.entsoe.eu

NC OS foresees structural and scheduled information exchange of HVDC interconnectors and the TSOs, HVDC setting the requirement for equipment and standards, while operational codes (i.e. NC OS) addressing the scope of information to be exchanged.

**NC Load Frequency Control & Reserves**

The NC LFC&R specifically refers to the role of HVDC links in several articles, in particular with regard to the realisation of the imbalance netting process and the cross-border sharing and activation of operational reserves. The inherently available control characteristics of HVDC links shall be utilised for such processes.

The main principle followed, which also determines the interactions with NC LFC&R, is that connection codes should ensure that the necessary technical capability for e.g. active power adjustment, reversal, ramping and limiting as well as the necessary communication infrastructure for receiving such orders is present where needed, while operational codes shall describe the framework and responsibilities with regard to provision of such services, and market codes describe the possible products and commercial aspects. NC LFC&R also prescribes management of total system inertia, utilising the capabilities described in among others in NC HVDC and also defining the consequential conditions required with respect to robustness.



ENTSO-E AISBL • Avenue de Cortenbergh 100 • 1000 Brussels • Belgium • Tel +32 2 741 09 50 • Fax +32 2 741 09 51 • info@entsoe.eu • www.entsoe.eu

## Answer to FAQ 4:

**Does the network code apply in non-EU member states or in respect to cross-border issues between a EU member state and a non-EU member state?**

It is foreseen that the network codes will be adopted via the comitology process in the format of an EU regulation.

Therefore, they will become binding vis-à-vis non EU-countries in accordance with the following principles.

1. For the non-EU countries which are parties to the EEA Agreement (the European Economic Area Agreement), the EEA Agreement provides for the inclusion of EU legislation that covers the four freedoms — the free movement of goods, services, persons and capital — throughout the 30 EEA States. The Agreement guarantees equal rights and obligations within the Internal Market for citizens and economic operators in the EEA.
   As a result of the EEA Agreement, EC law on the four freedoms is incorporated into the domestic law of the participating EFTA States. All new relevant Community legislation is also introduced through the EEA Agreement so that it applies throughout the EEA, ensuring a uniform application of laws relating to the internal market.
   As energy legislation covering the functioning of the internal market falls within the scope of the EEA-Agreement, the entire body of future network codes will almost certainly be EEA relevant, and hence be applicable and binding after decision by the EEA Committee and national implementation. The regular implementation procedures will apply.

2. As Switzerland is not a party to the EEA Agreement, the enforceability of the NC transformed into EU Regulation will need to be assessed in the context of the pending negotiations between Switzerland and the EU. However, Swiss law is also based on the principle of subsidiarity. Under this principle, self-regulating measures can be taken by the parties of the sector if they reach the conclusion that these rules should become common understanding of the sector. Based on the subsidiarity principle it is currently considered by the Swiss authorities to introduce under Swiss law, new rules compliant to relevant EU-regulations by the parties of the sector.

3. For the countries that are parties to the Energy Community Treaty, the Ministerial Council of the Energy Community decided on 6 October 2011 that the Contracting Parties shall implement the Third Package by January 2015, at the latest. Moreover, it decided “to start aligning the region’s network codes with those of the European Union without delay”. The network codes will be adopted by the Energy Community upon proposal of the European Commission. The relevant network codes shall be adopted by the Permanent High Level Group. The Energy Community Regulatory Board stressed on 5 September 2013 “the importance to implement the NCs in the Energy Community in a timely and coherent manner in coordination with the European developments.”



ENTSO-E AISBL • Avenue de Cortenbergh 100 • 1000 Brussels • Belgium • Tel +32 2 741 09 50 • Fax +32 2 741 09 51 • info@entsoe.eu • www.entsoe.eu

## Answer to FAQ 5:

**How will ENTSO-E efficiently and transparently perform stakeholder consultation?**

The active involvement of all stakeholders, to be reflected in particular through their submission of comments during the formal consultation according to Article of 10 Regulation (EC) 714/2009, is considered to be crucial for the development of the network codes.

–

Once the comments of a formal consultation are assessed by ENTSO-E, they will be made publicly available, together with the corresponding answers/justifications. ENTSO-E will indicate how the comments received during the consultation have been taken into consideration and provide reasons where they have not been acted upon.

All ongoing, scheduled and finished consultations on draft network codes can be accessed at the ENTSO-E web consultation portal[5].

The reader is referred for further information to the ENTSO-E publication "Consultation process"[6] and the network code web sections[7].

In addition to the formal consultation, ENTSO-E involves stakeholders in the NC HVDC development by means of a dedicated NC HVDC User Group, composed of more than 20 European organizations.

Prior to a formal consultation on a full draft network code, ENTSO-E pursued early views on a preliminary scope by means of a "Call for Stakeholder Input" consultation (May 2013).

–

[5] https://www.entsoe.eu/news-events/entso-e-consultations/
[6] https://www.entsoe.eu/fileadmin/user_upload/_library/consultations/110628_Consultation_Process_Description.pdf
[7] https://www.entsoe.eu/major-projects/network-code-development/



ENTSO-E AISBL • Avenue de Cortenbergh 100 • 1000 Brussels • Belgium • Tel +32 2 741 09 50 • Fax +32 2 741 09 51 • info@entsoe.eu • www.entsoe.eu

## Answer to FAQ 6:

**What is the role of the subsidiarity and proportionality principle in the NC HVDC?**

European Network Codes contain a number of non-exhaustive requirements, especially the codes in the grid connection domain. A non-exhaustive requirement within a Network Code does not contain all the information or parameters necessary to apply the requirement and needs further specification at national level. Implementation of Network Codes at a national level comprises making these specifications and decisions to render the non-exhaustive European requirements into exhaustively defined national or project specific rules and to update and amend respective technical regulations (e. g. existing grid codes) accordingly. In order to allow for such an implementation procedure, the NC HVDC introduces a three year period from the date of entry into force until its application.

Typically additional information or parameters are to be provided by the Relevant TSO. In many cases these specifications can be brought forward through an already established process at national level, e.g. grid code review panel, user group, public consultation, regulator or ministry approval. A Network Code itself does not prescribe these national processes, but merely stipulates that they shall be in accordance with the implementation of Directive 2009/72/EC and the principles of transparency, proportionality and non-discrimination, and caters for the involvement of the National Regulatory Authorities. This framework safeguards against unilateral or non-motivated decisions and ensures adequate involvement of stakeholders. Furthermore it allows Member States to continue most established processes, which often are acknowledged by all involved parties and have proven to be successful.

Non-exhaustive requirements have a valid role in a European Network Code because of their impact on security of supply, the integration of renewables or market development. Even as specifications depend on local system conditions, clear benefits exist when the code

a) ensures that these requirements are specified by the Relevant Network Operator or TSO in all Member States;
b) enforces a similar terminology and gives the minimum list of parameters and conditions to specify; and
c) covers compliance and derogations procedures across Europe in a transparent and non-discriminatory manner.

In many cases the Network Codes constrain national provisions from either very loose or extremely onerous implementations. A European Network Code pulls all national codes in the same direction.



ENTSO-E AISBL • Avenue de Cortenbergh 100 • 1000 Brussels • Belgium • Tel +32 2 741 09 50 • Fax +32 2 741 09 51 • info@entsoe.eu • www.entsoe.eu

## Answer to FAQ 7:

**Why does the network code not provide for dispute resolutions?**

The settlement of dispute provisions is commonly used for contractual types of relationships which are outside the scope of this network code.

Therefore, in case a dispute regarding the application of a network code provision arises, it shall be referred to national courts - which are the ordinary courts in matters of European Union law - in accordance with national rules. Nevertheless, to ensure the effective and uniform application of European Union legislation, the national courts may, and sometimes must, refer to the Court of Justice and ask it to clarify a point concerning the interpretation of EU law (in the network code provisions).

The Court of Justice's reply takes a form of a judgment and the national court to which it is addressed is, in deciding the dispute before it, bound by the interpretation given and the Court's judgment likewise binds other national courts before which the same problem is raised. It is thus through references for preliminary rulings that any European citizen/ entity can seek clarification of the European Union rules which affect him.



ENTSO-E AISBL • Avenue de Cortenbergh 100 • 1000 Brussels • Belgium • Tel +32 2 741 09 50 • Fax +32 2 741 09 51 • info@entsoe.eu • www.entsoe.eu

## Answer to FAQ 8:

**How does a NC on HVDC connection rules relate to equipment standards and planning standards?**

Standards are driven by a need for harmonization to remove trade barriers and cut manufacturing and compliance costs and aim to define common requirements for products. Network Codes contain connection rules, largely driven by the need to ensure security of supply in a power system undergoing vast changes and define functional capabilities without specifying how these are to be delivered.

The relation between standards and Network Codes has been acknowledged in a recent Memorandum of Understanding, signed by ENTSO-E and CENELEC. This underlines the legal basis of a Network Code and the benefit of standards that give further specifications and are based on the Network Code. Standardisation bodies were represented in the User Group in order to ensure that there is no conflict between the Network Code and existing standards or ones in an advanced stage of development, but rather complement each other.

It is also to be noted that the scope of issues to be covered in a European Network Code is also bound by the applicable Framework Guidelines, see also FAQ 9.

A connection code sets explicit capabilities for a connecting party, whereas a planning standard gives general requirements for the overall long term network development of the grid and overall system performance.



ENTSO-E AISBL • Avenue de Cortenbergh 100 • 1000 Brussels • Belgium • Tel +32 2 741 09 50 • Fax +32 2 741 09 51 • info@entsoe.eu • www.entsoe.eu

## Answer to FAQ 9:

**What is the appropriate level of detail and harmonization of the network code?**

The level of detail and the scope of the network code are in line with the scope defined by the corresponding framework guidelines provided by ACER which read as follow:

"*Furthermore, the network code(s) shall define the requirements on significant grid users in relation to the relevant system parameters contributing to secure system operation, including*:

- *Frequency and voltage parameters;* （*HVDC Article 7 and 16*）
- *Requirements for reactive power;(HVDC Article 18)*
- *Load-frequency control related issues;(HVDC Article 11 and 14)*
- *Short-circuit current; (HVDC Article 17)*
- *Requirements for protection devices and settings;(HVDC Section 5)*
- *Fault-ride-through capability; (HVDC Section 3)*

*(…)*"

The network code(s) shall set out how the TSO defines the technical requirements related to frequency and active power control and to voltage and reactive power management. Technical rules set at the synchronous system level for operational security shall be in line with these requirements. Those rules shall be aligned as far as technically possible and economically beneficial throughout the EU, irrespective of synchronous area borders.

The requirements in the network code have a system wide impact; however the appropriate level of detail for each requirement has undergone a case-by-case consideration of its purpose, taking into account the extent of the system-wide impact as a guiding principle. The relevant entity from the perspective of system security is predominantly the synchronous area (Continental Europe, Nordic States, Great Britain, Ireland and Baltic States).

For the requirements with immediate relevance to system security on the level of a synchronous area, besides a common level of methods and principles, common parameters and settings (thresholds, limits) are necessary to achieve a sustainable set of common requirements, since one of the aims of the network code is to harmonise requirements for HVDC throughout Europe to a reasonable extent to preserve system security in a non-discriminatory manner by applying the principle of equitable treatment. Other requirements of the network code are limited to the definition of common methods and principles and the details have to be provided by each TSO at national level (e. g. by explicit thresholds or parameter values). This allows consideration of specific regional system conditions (e. g. areas with different system strength, density of demand or concentration of Power Generating Modules). Therefore the level of detail of the requirements varies and the principles of subsidiarity and proportionality are applied.

It is to be noted that the NC HVDC is specific in the sense that HVDC links have more than one Connection Point. Although all requirements are applicable at a Connection Point, for certain requirements which are non-exhaustive, i.e. parameters are to be defined at a national level, a coordination of these parameters and/or procedures is necessary between the Relevant TSOs and NRAs. The framework of this coordination is described in the general clause in Article 4(6).



ENTSO-E AISBL • Avenue de Cortenbergh 100 • 1000 Brussels • Belgium • Tel +32 2 741 09 50 • Fax +32 2 741 09 51 • info@entsoe.eu • www.entsoe.eu

## Answer to FAQ 10:

**Why does the network code not define certain requirements as paid-for ancillary services?**

The scope of this network code is to define requirements for technical capabilities of HVDC connections which are needed for secure operation of the electricity transmission system. Operational issues are covered in NCs OS and LFC&R. Paid-for ancillary services are broadly defined in NC Electricity Balancing (EB), further specifics (including payments) are to be found in national documents.

One objective of the network code is clearly specifying the necessary technical capabilities in order to enable the industry to consider these features for future HVDC connections and to develop corresponding technical solutions. This approach has been expressively endorsed by the industry, because sufficient time for research and development is needed to be able to deliver the required functionalities. Introducing such capabilities only when the market demands for them is not sustainable as this inherently bears the risk, that at the time the market requests for these capabilities, they are not available and cannot be introduced at short notice causing a substantial risk to the security of the power system due to lack of ancillary services.

It needs to be well distinguished between mandatory requirements of capabilities and the provision of ancillary services based on these capabilities. ENTSO-E agrees with stakeholders, that the provision of ancillary services is basically market-related which needs to be appropriately remunerated. The paid-for ancillary services can be expected to evolve over a longer period of time. The introduction of remuneration provisions are the subject of other Network Codes or arrangements.



ENTSO-E AISBL • Avenue de Cortenbergh 100 • 1000 Brussels • Belgium • Tel +32 2 741 09 50 • Fax +32 2 741 09 51 • info@entsoe.eu • www.entsoe.eu

## Answer to FAQ 11:

**Do the requirements have to be considered as "minimum" or "maximum" requirements; what is the understanding of "minimum"/ "maximum" requirements?**

"Minimum" relates to the request for defining the minimum set of requirements in the corresponding network code(s) which is necessary in order to achieve the objectives of the framework guidelines and consequently of Regulation (EC) 714/2009. The terms "minimum" (and "maximum" respectively) shall not be understood in the sense of defining minimum (or maximum) values for parameters, thresholds, ranges, etc.

The requirements established in the network code prevail over national provisions when implemented via European Regulation, and if compatible with the provisions in the European network code(s), national codes, standards and regulations which are more detailed or more stringent than the respective European network code(s) should retain their applicability. Nevertheless, additional measures remaining within the scope of the network code can, as a matter of principle, be taken at the national level provided that they do not contradict the provisions of the network code (e.g. if the NC explicitly allows for a parameter to be selected at national level in a prescribed range of values).

The following examples attempt to clarify this principle:

- Example 1: Art 8 The network code requires that each HVDC System shall be capable of withstanding a rate-of-change-of-frequency up to 2.5Hz/s.
    - It is not admissible to define a value under this minimum limit on a national level, but a value above this limit could be defined by the national (relevant) TSO.
- Example 2: Art 15 (1)(b) The network code determines that the admissible continuous operational voltage range capability for a HVDC system at connection point(s) (minimum operation time periods in case of voltage deviation).
    - If wider voltage ranges or longer minimum times for operation are economically and technically feasible, the consent of the HVDC System Owner shall not be unreasonably withheld. Wider Voltage ranges or longer minimum times for operation can be agreed between the Relevant TSO and the HVDC System Owner to ensure the best use of the technical capabilities of a HVDC System. The same principle also applies for frequency range capability.



ENTSO-E AISBL • Avenue de Cortenbergh 100 • 1000 Brussels • Belgium • Tel +32 2 741 09 50 • Fax +32 2 741 09 51 • info@entsoe.eu • www.entsoe.eu

## Answer to FAQ 12:

**Which terminology is used in this code, and how does it relate to that in other Network Codes, national codes and standards?**

The terminology used in NC HVDC corresponds to the general terminology used in other ENTSO-E Network Codes, terminology contained in Article 2 of Directive 2009/72/EC and that of Article 2 of Regulation (EC) N°714/2009. For HVDC related terminology the proposed definitions are in line with IEC 60633 "Terminology for high voltage direct current (HVDC) transmission".

In order to clarify the definitions used in the code, the below single line diagram is composed. The figure below is based on the configuration of Skagerrak 1, 2 and 3 (LCC) and the coming Skagerrak 4 (VSC). Definitions illustrated are HVDC Converter Unit, HVDC Converter Station, and HVDC System.

**DC-connected Power Park Module** means a Power Park Module that is non-synchronously connected to one or more Synchronous Area(s) via HVDC System(s). Unless otherwise stated, Power Park Module referred to in this network code means a DC-connected Power Park Module**;**

**DC-connected Power Park Module Owner** means a natural or legal entity owning a DC-connected Power Park Module;

**HVDC Converter Station** means part of an HVDC System which consists of one or more Converter Units installed in a single location together with buildings, reactors, filters, reactive power devices, control, monitoring, protective, measuring and auxiliary equipment;

**HVDC Converter Unit** means an operative unit comprising of one or more converter bridges, together with one or more converter transformers, reactors, converter unit control equipment, essential protective and switching devices and auxiliaries, if any, used for the conversion;

**HVDC System** means an electrical power system which transfers energy in the form of high-voltage direct current between two or more AC buses. A HVDC System comprises of at least two HVDC converter stations with DC transmission lines or cables or direct DC circuit connections between the pair of HVDC converter stations. It can also comprise at least two HVDC converter stations connected at the AC side of the converter transformers (multi-terminal). A HVDC System has at least two Connection Points; it can connect between two synchronous areas, within one synchronous area, or between a Power Park Module and a synchronous area;

**HVDC System Owner** means a natural or legal entity owning a HVDC System;

**Remote-end HVDC Converter Station** means a HVDC Converter Station which is synchronously connected to DC-connected Power Park Module(s);

**Remote-end HVDC Converter Station Owner** means a natural or legal entity owning a Remote-end HVDC Converter Station.



ENTSO-E AISBL • Avenue de Cortenbergh 100 • 1000 Brussels • Belgium • Tel +32 2 741 09 50 • Fax +32 2 741 09 51 • info@entsoe.eu • www.entsoe.eu

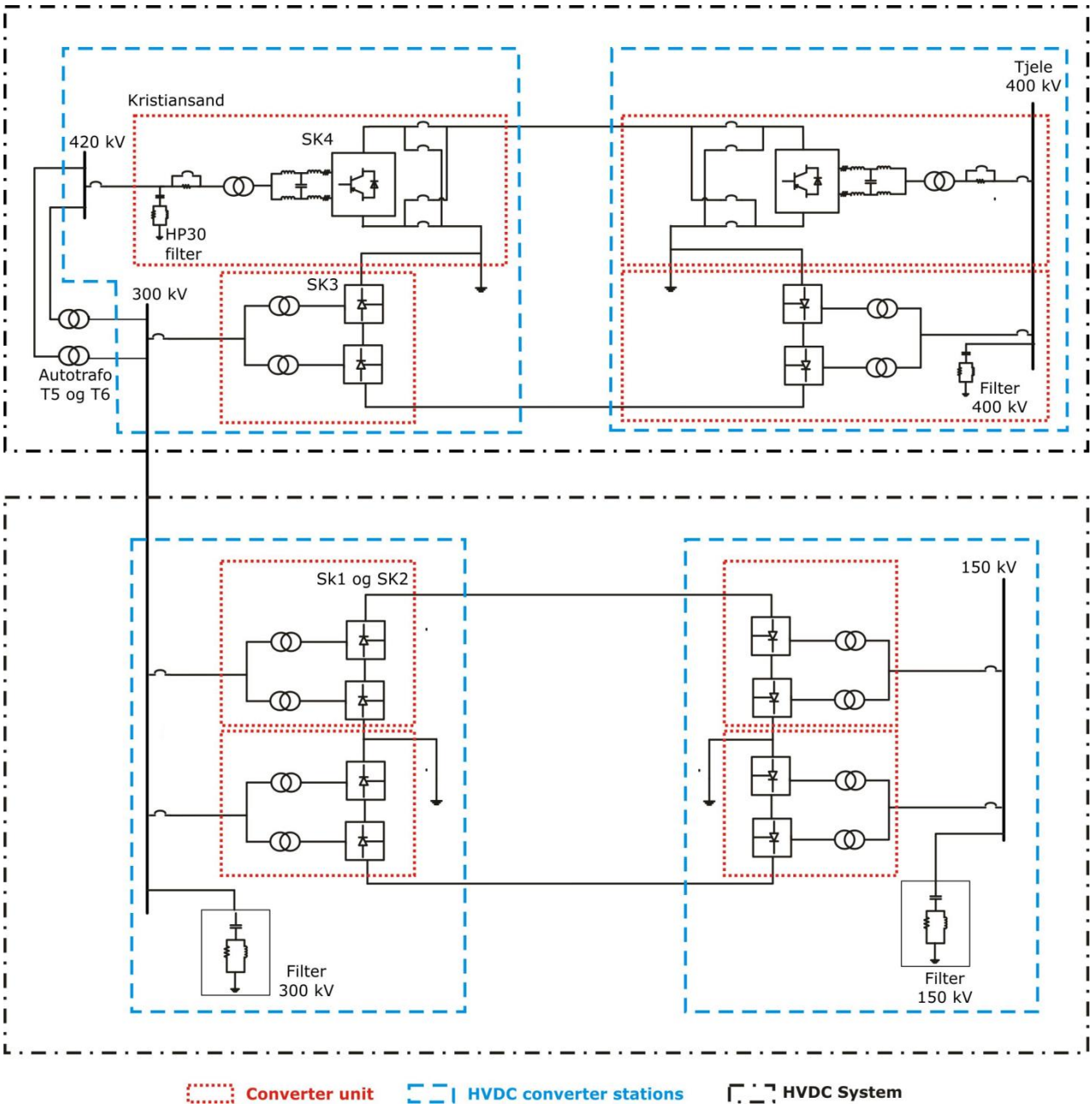




ENTSO-E AISBL • Avenue de Cortenbergh 100 • 1000 Brussels • Belgium • Tel +32 2 741 09 50 • Fax +32 2 741 09 51 • info@entsoe.eu • www.entsoe.eu

## Answer to FAQ 13:

**Why does the code not make a distinction between LCC and VSC technology?**

HVDC technology will increasingly be used in the coming years to develop interconnections between different TSOs (inter- or intra- synchronous zones) and it is of the utmost importance for these new facilities not only to improve power system security but also to contribute to market integration by supporting the development of cross-border exchange of energy and reserve. From technology perspective mainly two solutions are in use – LCC and VSC technology. The LCC technology has been available for many decades and therefore can be considered as mature whereas the VSC technology can be considered as developing technology and has been on the market for the last ten years, but is still undergoing considerable change.

It is well recognized that there are differences between the inherent functionalities of the two technologies but from the perspective of NC HVDC they are considered as a HVDC System connected to the network at a connection point. The requirements stated in the NC HVDC are based on system needs and consider the integrity of the power system, development trends in the future, and security of supply. The objective has been to define the minimum performance requirements needed to ensure reliable operation of connections. The performance requirements are defined in general for HVDC systems at the connection point considering technology neutrality. In the NC HVDC, different requirements are composed based on the viewpoint of mandatory and non-mandatory requirements and exhaustive and non-exhaustive requirements (see Explanatory Note document). Non-mandatory requirements have been applied in a limited number of cases where not all technologies can reasonably deliver a capability. This approach is considered to provide sufficient flexibility to guarantee the technology neutrality and emphasize the performance of the HVDC. ENTSO-E has endeavoured to seek the views also of the wider industry (NC HVDC User Group) on early drafting of the code as to ensure that the NC HVDC does not prevent future application of an HVDC technology as such.



ENTSO-E AISBL • Avenue de Cortenbergh 100 • 1000 Brussels • Belgium • Tel +32 2 741 09 50 • Fax +32 2 741 09 51 • info@entsoe.eu • www.entsoe.eu

## Answer to FAQ 14:

**Who does the code apply to, at which point, and why?**

***Who does the code apply to and why?***

According to ACER's FWGL, *"the network code will apply to grid connections for all types of significant grid users already, or to be, connected to the transmission network and other grid user, not deemed to be a significant grid user will not fall under the requirements of the network code"*.

The FWGL give a general definition of the Significant Grid Users by defining them as *"pre-existing grid users and new grid users which are deemed significant on the basis of their impact on the cross border system performance via influence on the control area's security of supply, including provision of ancillary services"*.

Based on that definition, in the NC HVDC the following HVDC configurations are considered as Significant Grid Users:

- HVDC Systems connecting Synchronous Areas or Control Areas, including back to back schemes;
- HVDC Systems connecting Power Park Modules to the Network;
- HVDC Systems embedded within one Control Area and connected to the Transmission Network; and
- HVDC Systems embedded within one Control Area and connected to the Distribution Network when a cross-border impact is demonstrated by the Relevant TSO and approved by the NRA.

In addition, based on that definition, in the NC HVDC, the Power Park Modules that are AC collected and DC connected to the main electricity system at any AC transmission voltage are also considered as Significant Grid Users. The emerging alternative way of connecting individual power generating units via MVDC is deemed as not yet adequately mature to be detailed in this NC. National or local requirements will apply until this area is covered in future issues.

The following picture illustrates the above mentioned configurations considered in the NC HVDC.

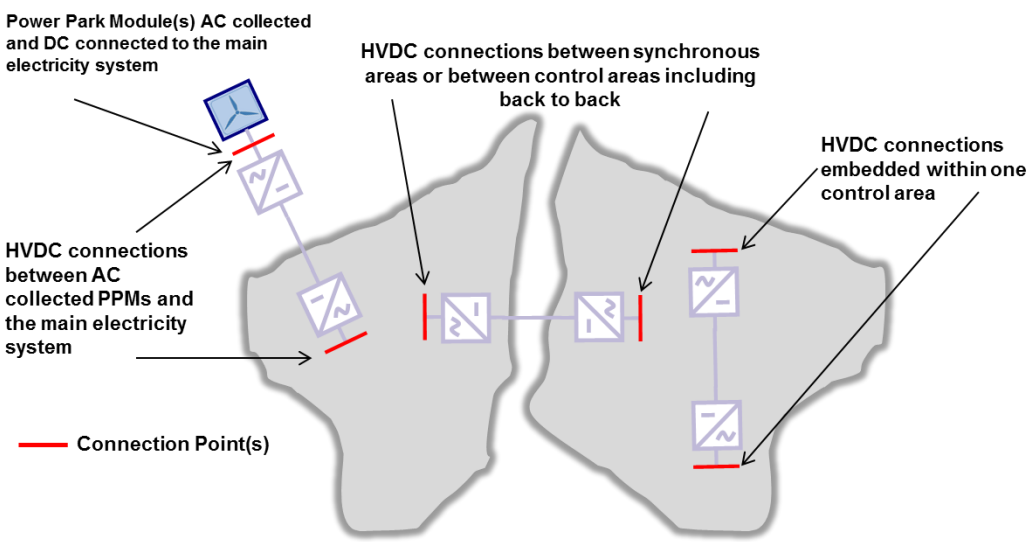


*Example 1: Illustration of the Significant Grid Users considered in the NC HVDC and the Connection Points at which the requirements apply.*



ENTSO-E AISBL • Avenue de Cortenbergh 100 • 1000 Brussels • Belgium • Tel +32 2 741 09 50 • Fax +32 2 741 09 51 • info@entsoe.eu • www.entsoe.eu

It is clear that HVDC systems between control or synchronous areas have, by definition, a cross-border impact. However, due to the meshed structure of the transmission system and because, for economic reasons, embedded HVDC systems are expected to expand over long distances and to have significant power rating, the operation and the behaviour of these links will therefore impact the active and reactive power flows of several AC grid elements, within the control area but also within neighbouring control areas. These changes could have serious impacts on the TSO's task to maintain security of supply. For this reason, these links should also be considered as significant users. Furthermore, in some situations and due to the diversity of distribution and transmission system structure across Europe, an HVDC link connected to the distribution system could, if cross-border is proven, fall within the scope of applicability of this NC. It is important to recall that cross-border issues are not only based on active power exchange in tie lines but are also related to the technical capabilities of all the users playing a critical role in system security. Requirements of this NC will also improve robustness to face disturbances; will help to prevent any large disturbance and will facilitate restoration of the system after a collapse. An HVDC generation collection system, in which all the AC/DC terminals are connected within a single control area, has therefore a cross border impact due to the fact that it is the interface between the grid and a significant generating units and because its capability will greatly impact the system robustness in case of secured faults.

During the development of the NC RfG a principle decision was taken to exclude DC connected PPMs from the scope of that code, but to have these covered when developing European connection rules for HVDC Systems at a later stage. These generating units were expected to be significant as per the criteria defined in the NC RfG but strong coherence between what is required for these users and what is required for the HVDC link connecting them to the main power system is essential. The NC HVDC covers as such both the HVDC System and the remote end PPMs.

As a general rule, the requirements set forth by this Network Code apply to New Significant Users. Existing HVDC systems or Existing DC-connected Power Park Modules are facilities which are either physically connected to the Network, either under construction, or which have a confirmation that a final and binding contract for the construction, assembly or purchase of the main installation exists the two years after entry into force of this NC. This approach would avoid any unreasonable impact on the ongoing user installation building process. Also, existing users continue to be bound by the technical requirements that apply to them prior to the entry into force of this NC.

It should be noted that in case of replacement/improvements/modernisation of an Existing Significant User installation, it is required that the replaced/improved/modernised part of the installation becomes compliant with the requirements of the network code, unless the user applies for a derogation from this obligation and this derogation is granted by the NRA.

Furthermore, as requested by the ACER Framework Guidelines and as needed to cover risks related to the uncertain evolutions of the future European power systems, the NC requirements will also apply to Existing Significant Users if the relevant TSO has demonstrated by a quantitative cost-benefit analysis that the costs to fulfil this requirement are lower than the benefits to the power system and if this request for retroactive application of the code has been approved by the National Regulatory Authority.

***At which physical point are the technical requirements of the code applicable and why?***

It is of major importance that the code remains technology neutral and that the code gives rooms for the user to choose its preferred approach to comply with the requirements and to fulfil its own objectives. By doing this, ENTSO-E will avoid restraining R&D programs and will promote innovative solutions.

For this reason, requirements will describe the functional behaviour of the user installation at the connection point, which is the physical interface between the user installation and the grid as referred to in the connection agreement.



ENTSO-E AISBL • Avenue de Cortenbergh 100 • 1000 Brussels • Belgium • Tel +32 2 741 09 50 • Fax +32 2 741 09 51 • info@entsoe.eu • www.entsoe.eu

In addition, following consultation and following agreement with stakeholder representatives in the 2nd NC HVDC User Group it is considered feasible and preferable to define the requirements of an HVDC system including DC components without making reference to the DC voltage or DC equipment. Only AC connection points are therefore considered in the present issue of this NC.

Specific considerations for meshed DC networks are excluded from the current scope of the NC HVDC. For the avoidance of doubt, the AC Connection Point requirements as prescribed in this draft NC HVDC do still apply at the AC Connection Points of DC meshed grids.

Currently CIGRE group (WG B4-56) is working on connection requirements for meshed DC Grids whose report is expected end of 2013 or early 2014. This group is further considering recommending the adoption of standard DC voltages, similar to how 400kV is a standard voltage in Europe for AC. In a DC Grid it will eventually become possible to have a Connection Point directly at HVDC (connection to a DC busbar) and later one to defined performance type requirement at the DC connection point.

The previous picture also illustrates the location of the (AC) connection points of the HVDC system to the AC system as well as the (AC) connection points of the Power Park Module to the AC collection system. These connection points form the physical interface with the systems thus the performance requirements are usually defined related to this connection points.



ENTSO-E AISBL • Avenue de Cortenbergh 100 • 1000 Brussels • Belgium • Tel +32 2 741 09 50 • Fax +32 2 741 09 51 • info@entsoe.eu • www.entsoe.eu

## Answer to FAQ 15:

**How does the code impact existing users?**

The European power system is changing rapidly: internal market evolves; Demand Side Response and renewable generation increases; new transmission technologies, such as FACTS (Flexible AC Transmission Systems), HVDC (High Voltage Direct Current) lines, etc. are introduced. In this situation there is an inherent uncertainty in anticipating the needs for power system security throughout the next 20 years. On the other hand, the requirements of this network code will enter into force by means of European legislation, which means that they will be applicable for a rather long time and changes/amendments to them can only be implemented by running through lengthy European legislative procedures. Hence, it is essential to have the possibility to apply network code requirements retroactively to existing users. Such application will be pursued in very particular and reasonable cases and, with all the necessary safeguards to grid users following the principles of ACER's framework guidelines. A consistent approach has also been prescribed in the Demand Connection Code and the NC Requirement for Generators. This process prescribes a thorough cost benefit analysis (based on data contribution from the HVDC System or DC-connected PPM owner), a transparent consultation and final decision by the NRA.

Existing HVDC systems or DC-connected PPMs, which are not covered by the network code, shall continue to be bound by the already existing technical requirements that apply to them pursuant to legislation in force in the respective Member States or contractual arrangements in force. Consequently, existing national/local derogations may remain in force as well, provided that they refer to a requirement not covered by the European network code.

In case of replacement/improvements/modernisation of an existing Significant User Installation, it is required that the replaced/improved/modernised part of the installation is compliant with the requirements of the network code, unless the user applies for a derogation from this obligation and this derogation is granted by the NRA. Indeed, during a replacement/improvements/modernisation the fulfilment of the NC HVDC can added in the specifications as long as such type of equipment can reasonably fulfil some of the requirements of the NC. As an example, the replacement of the protection system of an existing HVDC link has no or a negligible impact on the reactive power capability of the system and should therefore not fulfil the related requirements (i.e. Article 18: "Reactive power capability") but well the requirements of the NC related to "Electrical protection schemes and settings" and to "Priority ranking of protection and control".



ENTSO-E AISBL • Avenue de Cortenbergh 100 • 1000 Brussels • Belgium • Tel +32 2 741 09 50 • Fax +32 2 741 09 51 • info@entsoe.eu • www.entsoe.eu

## Answer to FAQ 16:

**Why are some generators covered by the NC RfG and some by the NC HVDC?**

The NC RfG defines the requirements for generators connected to Synchronous Areas. This covers the main parts of the European power system and is characterized by a certain amount of rotating masses and a considerable fault current level. In contrast, the scope of this network code is the definition of requirements for HVDC connected Power Park Modules. This covers the absence of synchronous generation in combination with the connection to the main AC system by HVDC results in fully different physical grid conditions of this "small" system. As these systems are fully based on power electronics there is no physical coherence between power balance and frequency.

However, one objective of the network code is to clearly specify the necessary technical capabilities in order to enable the industry to consider these features for future PPMs and to develop corresponding technical solutions independently from the way of connection, whenever possible and reasonable. This would enable the design of PPM solutions fitting to both markets, i.e. offshore with HVDC and on-/near-shore by AC connection. Therefore, the NC HVDC specifies different requirements from the RfG whenever necessary because of the system specifics and sticks to the known necessities as given by the RfG, if reasonable. This approach was broadly agreed on in the 2nd NC HVDC User Group meeting.

Further, the requirements set in this network code need to be forward looking: the expected mid- and long-term developments need to be taken into account. Even more, the NC should enable and foster future improvement. Thus, the definition should not unnecessarily hinder the future optimisation and flexible extension of the system. Therefore, the code is seeking for common rules to be future proof and foster enlargements of the systems by, e.g. enabling interconnections in-between different HVDC-platforms offshore. In addition this would be the most flexible way to design HVDC grid connection systems offshore if, as it is the case in some countries, a HVDC grid connection system is not designed together with a PPM within the framework of a single project. Standardization is necessary in order to host multiple offshore PPMs of different design and type of machines. This framework requires a certain degree of standardization, offering the needed flexibility for both parties (HVDC operator and PPM owner). This is needed during planning, project execution and operation as this will also enable flexibility to connect PPMs to different HVDC systems within a cluster in case of the non-availability of the HVDC system originally assigned to.



ENTSO-E AISBL • Avenue de Cortenbergh 100 • 1000 Brussels • Belgium • Tel +32 2 741 09 50 • Fax +32 2 741 09 51 • info@entsoe.eu • www.entsoe.eu

## Answer to FAQ 17:

**How are multi-terminal connections and meshed DC grids covered by the code? Is there a roadmap for future amendments of the NC HVDC?**

The NC HVDC focuses on DC transmission grids' point to point connections, as well as extensions to multi-terminal radial connections. Meshed DC grids and DC collection grids are out of the scope of this network code.

At present HVDC systems provide predominantly point to point power transfers. Preliminary studies are concluding that DC Grids are feasible (see CIGRE (WG B4-52) WG report issued in December 2012. Another CIGRE group (WG B4-56) is working now on connection requirements for meshed DC Grids whose report is expected end of 2013 or early 2014). It is envisaged that meshed DC grids will gradually emerge for some applications in the future but this technology will need time to be developed and is not expected to allow operational development in the next five to ten years.

For that reason meshed DC network are considered out of the scope of the present NC HVDC, with possible inclusion in future amendments once the technology matures. Future revisions of the NC HVDC are expected to bring these aspects forward as the DC grid technology moves into implementation.

Examples of multi-terminal radial connection covered by the code:

1. Geographically distant converter stations connected to the same dc line or cable

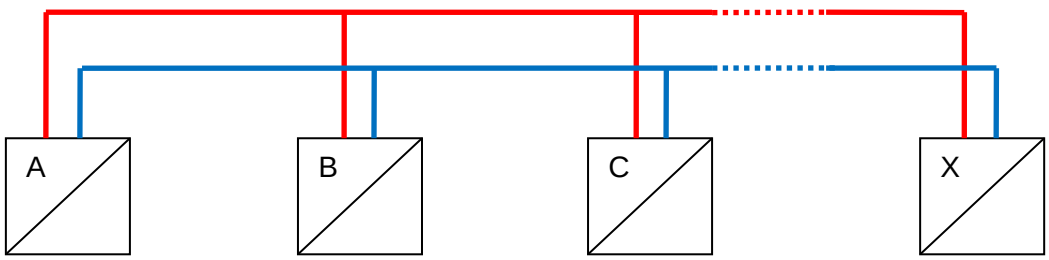


2. Hub configuration

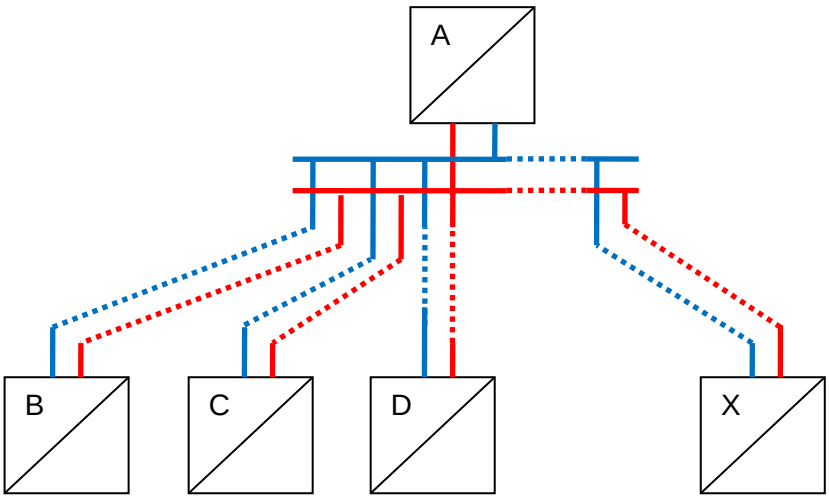




ENTSO-E AISBL • Avenue de Cortenbergh 100 • 1000 Brussels • Belgium • Tel +32 2 741 09 50 • Fax +32 2 741 09 51 • info@entsoe.eu • www.entsoe.eu

## Answer to FAQ 18:

**How should the combined effect of frequency and voltage ranges be interpreted?**

For both frequency and voltage required operating ranges are defined in which immediate disconnection of a HVDC System or DC-connected Power Park Module is prohibited due to the deviation of the frequency or the voltage from its nominal value. These requirements also define the duration that the HVDC System or the generators are required to withstand this deviation. A non-discriminatory behaviour is prescribed from generation and demand. The international standard IEC 60034 gives a specific reference to which the NC RfG is aligned. Even as HVDC technology or PPM interfaces may have less difficulty in complying with withstand capabilities, the requirement is aligned with that of synchronous generators. In the IEC Standard 60034-1 for rotating electrical machines these two dimensions (ranges and times) are combined in a single diagram covering both voltage and frequency (see RfG FAQ 19, Figure 1).

– *Why does ENTSO-E not do the same?*

  The IEC standard covers requirements at the generator terminals. The network code covers requirements at the Connection Point. Therefore they are very different. The impact of the generator transformer possibly with an on-load tap changer as well the impact of the collection network in the case of a Power Park Module makes up this difference. The network code does not specify the voltage range at the generator terminals.

– *If there is no diagram how should the situation of simultaneous deviation in frequency and voltage be interpreted?*

  Each requirement applies on its own. If the specified duration withstand capability is exceeded, then the HVDC System or DC-connected PPM is entitled to trip. If both parameters vary at the same time, the parameter with the shortest duration criterion can initiate the trip.

Example for an HVDC System with Connection Point in the GB Synchronous Area (400 kV):

If 51.7 Hz (frequency limited time operation) and 1.07 p.u (voltage limited time operation) occurs for 10 min, what will happen?

– It is not allowed to trip on frequency, however after 15 min, it would be allowed to trip for voltage (>1.05 for longer than 15 min).



ENTSO-E AISBL • Avenue de Cortenbergh 100 • 1000 Brussels • Belgium • Tel +32 2 741 09 50 • Fax +32 2 741 09 51 • info@entsoe.eu • www.entsoe.eu

## Answer to FAQ 19:

**How can an interconnector provide frequency support, including inertia and even contribute synchronising torque?**

Change of system frequency depends on the difference between the generated and the consumed power as well as of the inertia of the power system.

Frequency and inertia support can be provided by controlling the active power output of the interconnector, within its ratings, at the point of connection in such a way that imbalance between generation and demand is minimised.

Inertia support can be provided by regulating the power output DP1 from the interconnector in response to a rate of change in the frequency df/dt according to DP1= -2H df/dt. For decreasing frequencies DP1 is positive. H [s] is the inertia constant. When using rate of change of frequency some care must be taken to filter the measurement such as to avoid undesired activation due to inherent noise.

Frequency support can be provided by regulating the active power output of the interconnector in response to a frequency deviation from its nominal value according to DP2 = -K(fmeas – fn) where K [MW/Hz] is the network power frequency characteristic. For measured frequencies lower than the rated frequency DP2 is positive.

The magnitude of the additional power DPout required for inertia and frequency support is the resulting power derived from the inertia response plus the primary frequency response DPout = DP1+DP2.

Specific implementation of the control algorithms may depend on the HVDC manufacturer.

Note that an interconnector can at times give frequency support to both the connected systems when the frequencies on the two sides deviate in opposite directions. Conventionally, any frequency support given on one side of the interconnector is based on the acceptance of an equal deviation in imbalance as the additional power which is delivered to the disturbed system.

Recent publications (see further explanation in NC HVDC - Explanatory Note) have however, demonstrated that for a very short burst of power in an inertial response (only a few seconds required), use of the capacitive stored energy in the DC link may suffice and therefore largely make the inertial response independent of system conditions in the opposite end. This is achieved by allowing the SI controller to vary the DC link voltage by a modest percentage for a short period. A reduction in DC link voltage releases positive SI, acting to reduce df/dt following large infeed losses.

Other publications (see Explanatory Note) have shown that a SI contribution can be controlled to give a second beneficial effect, namely enhance the synchronising torque. For operation with extreme low & synchronous generation (SG) modelling in Ireland and GB indicate that for when in real time for a synchronous area SG is approach 25-35% this becomes a stability problem. A contributory solution allowing higher RES production (with less constraint action) can be provided by delivering the synthetic inertia in a smarter manner, contributing synchronising torque. The specified requirement allows this additional functionality to be added, but as this is a recent development, a cautious approach is adopted. This requirement is both non-mandatory and non-exhaustive (key parameters to be defined at national / project level). Two further tests are included prior to adoption:

- The need to be demonstrated for a particular country (in context of the conditions in its synchronous area), by forward modelling, e.g. out to 2030.
- The confirmation that the practical manufacturing technology can deliver in accordance with the published research work.



ENTSO-E AISBL • Avenue de Cortenbergh 100 • 1000 Brussels • Belgium • Tel +32 2 741 09 50 • Fax +32 2 741 09 51 • info@entsoe.eu • www.entsoe.eu

## Answer to FAQ 20:

**Why do HVDC Systems have stronger frequency/voltage withstand capabilities than generation and demand?**

The capability of operating Power Generating Modules during deviations of the system frequency from its nominal value is of crucial importance from the perspective of system security. Significant deviations are likely to occur in case of major disturbance to the system, which come along with splits of normally synchronously interconnected areas due to imbalances between generation and demand in the then separated parts of the system. A rise of frequency will occur in case of generation surplus, while lack of generation will result in a drop of frequency. The volume of a frequency deviation not only depends on the amount of imbalance, but also on other conditions / characteristics of the system, such as the generation profile i.e. system inertia, spinning reserve and the frequency response speed. In this sense, the current massive displacement of conventional generation by renewable generation increases frequency sensitivity if the system. In general, smaller systems will usually be exposed to higher frequency deviations than bigger ones. In the same way, peripheral systems which are part of very large systems, such as the interconnected Continental European area, but are weakly interconnected to the main system will be exposed to substantial frequency deviations in case of disturbances that cause the trip of the interconnections with the main interconnected system. Therefore, the capability of operation of HVDC Systems under such frequency conditions is a prerequisite to keep the system "running" in order to be able to continue electricity supply and to restore a secure system state quickly. Moreover HVDC systems as the back bone of the transmission system with the capability of fast active and reactive power control are expected to be more robust against frequency deviations in order to improve system stability in case of emergency situations. The NC HVDC ensures that tripping of HVDC Systems does not occur before tripping of generation or demand connection is allowed (as prescribed in NC RfG and DCC). The same reasoning is applied for voltage deviations during severe system events.



ENTSO-E AISBL • Avenue de Cortenbergh 100 • 1000 Brussels • Belgium • Tel +32 2 741 09 50 • Fax +32 2 741 09 51 • info@entsoe.eu • www.entsoe.eu

## Answer to FAQ 21:

**What does fault-ride-through mean for an HVDC system and how should the requirement be interpreted?**

It is crucial for the power system reliability that HVDC systems remain in stable operation and connected to the network whenever contingencies and secured faults occur on the AC transmission network. The capability of HVDC systems to remain connected during contingencies and faults in AC networks to which the HVDC system is connected is referred to as "fault ride-through" capability (FRT). Its need in case of embedded generation has been widely demonstrated in research papers and TSO case studies. See also the development of the NC RfG and the ongoing work of CENELEC on embedded generation specifications in this respect.

FRT requirements are based on a voltage-against-time profile at the Connection Point, which reflects the worst voltage variation during a fault and after its clearance (retained voltage during a fault and post-fault voltage recovery) which is to be withstood. HVDC systems have to stay connected to the grid for voltages above those worst-case conditions and shall continue stable operation after clearing of faults on the network and then continue stable operation in order to assist in system stability.

A number of motivations for this FRT capability are:

- Power systems are designed to withstand a sudden loss of system components i.e. transformers, lines, generation or combinations thereof known as (n-1), (n-2) etc. security, after secured faults. If HVDC systems connected to healthy circuits do not remain connected and stable during and after a fault, system security may be jeopardized due to a sudden loss of transmission capacity and resulting power imbalance. This possibly entails loss in the system greater than the one the system is designed to withstand.
- If FRT capability is not applied in the HVDC system design their inherent control capability during critical situations is not reliable and the full generation capacity from HVDC connected PPMs can be lost.
- It must be ensured that as a result of a voltage drop and during the voltage recovery phase, the auxiliary and control supplies of the HVDC system do not trip.

In order to ensure a proportional and non-discriminatory application of the FRT requirements of HVDC systems throughout Europe, the NC HVDC gives a clear frame by which each TSO is obliged to define the pre-fault and post-fault conditions for the fault ride through capability in terms of:

- conditions for the calculation of the pre-fault minimum short circuit capacity at the Connection Point;
- conditions for pre-fault active and Reactive Power operating point of the Generating Unit at the Connection Point and voltage at the Connection Point;
- and conditions for the calculation of the post-fault minimum short circuit capacity at the Connection Point.

The parameter Uret is the voltage during fault duration, and is to be specified by the Relevant TSO to reflect local network conditions. If the fault lasts less than the specified duration (Tclear), then the HVDC system is obliged to stay connected, i.e. if the fault conditions fall below the solid red line from the time of fault, the HVDC system's protection is allowed to trip it by opening its AC breaker at the connection point.



ENTSO-E AISBL • Avenue de Cortenbergh 100 • 1000 Brussels • Belgium • Tel +32 2 741 09 50 • Fax +32 2 741 09 51 • info@entsoe.eu • www.entsoe.eu

As specified in Figure 6 and Table 7, the blocking of the converter is allowed, which means that active and reactive power contribution is blocked although the HVDC system is still connected to the transmission network. Then, within some determined time after the clearance of the fault (which must be as short as technically feasible) and network voltage restoration, the converter must recover a stable operation point according to the prescribed post-fault network conditions.

The specifications of Figure 6 and Table 7 only apply to symmetrical 3 phase AC faults. Asymmetrical fault conditions and fault ride through capability are to be specified by the Relevant TSO on a case by case basis. DC faults are not specified under this NC. Post-fault active power recovery is separately specified in Article 24.



ENTSO-E AISBL • Avenue de Cortenbergh 100 • 1000 Brussels • Belgium • Tel +32 2 741 09 50 • Fax +32 2 741 09 51 • info@entsoe.eu • www.entsoe.eu

## Answer to FAQ 22:

**Which reactive power requirements does the NC HVDC set on HVDC connections?**

The NC HVDC defines a set of reactive power requirements that the HVDC converter shall fulfil at the connection point(s). They are written in such a manner that LCC technology is not discriminated against when the TSO(s) consider, the specifications of a project can be made so as to choose LCC over VSC technology, depending on the network conditions, either actual or planned, costs or other parameters as applicable. Where the requirement cannot be inherently met from LCC converters for example, additional reactive compensation could be installed as well to meet the HVDC System's requirements at the connection point. The requirement is also to be seen in context of reactive power delivery by generation, demand response and other system solutions.

Article 18 (*"Reactive power capability"*) defines the rating of the HVDC system in terms of active and reactive power capability in a range of voltage levels. It specifies a capability envelope U-Q/Pmax (illustrated as dotted in Fig 5) with a range of consumption and production reactive power supplied at the connection point in the whole range of active power supply of the HVDC. system. The relevant TSOs specify, at Maximum Capacity and in the context of varying Voltage, the maximum positive and negative reactive power that could be delivered at the connection point by defining the appropriate range in Table 7 with respect to the fixed inner envelope, and which should be within the outer envelope. As the requirement is written, a U-Q/Pmax can be specified at national level so as to comply with VSC capabilities (PQ-diagram, figure 1. A 4-quadrant curve within which the VSC HVDC substations must operate) or LCC capabilities (PQ-diagram, figure 2: A band around the P-axis within which the LCC HVDC substation must operate, delta Q is the maximum allowed AC filter size. The requirement is written in a technology independent manner however if a PQ-diagram like figure 1 is specified inherently it can be obtained by HVDC Converter Units or by LCC HVDC converter Units with additional compensation equipment installed in the HVDC Substation.

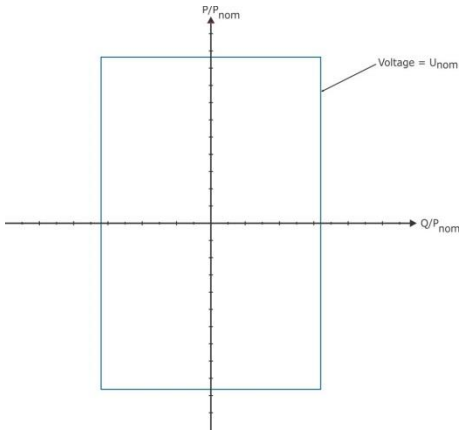


*Figure 1: PQ-diagram for a VSC HVDC Converter Unit*

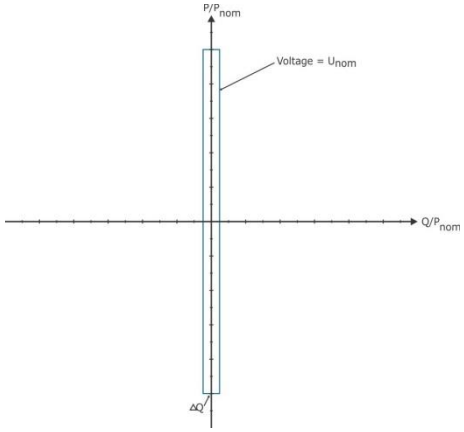


*Figure 2: PQ-diagram for a LCC HVDC converter Unit. Delta Q is the maximum AC filter size*



ENTSO-E AISBL • Avenue de Cortenbergh 100 • 1000 Brussels • Belgium • Tel +32 2 741 09 50 • Fax +32 2 741 09 51 • info@entsoe.eu • www.entsoe.eu

Article 19 ("*Reactive power exchanged with the Network"*) concerns the reactive power that the HVDC converter could exchange with the network within the operation at different active power levels, and the reactive power variation ΔQ caused by the HVDC system operation according the range given by the Relevant TSO. It concerns the design of the filters and additional equipment so as to ensure that the possible reactive power consumption of an HVDC connection does not jeopardize the power system. The second part of the article concerns the design of the bank of capacitors so as not to have undesired voltage transient steps when switching each bank.

Article 20 ("*Reactive power control mode*") concerns the reactive power control modes which should all be implemented in the HVDC system, aiming to operate it in the system: Voltage Control mode (HVDC station reactive power output aiming to follow a voltage set-point), Reactive-Power Control mode (HVDC station reactive power output aiming to follow a reactive power set-point) and Power-Factor Control mode (HVDC station reactive power output aiming to follow a Power Factor target).



ENTSO-E AISBL • Avenue de Cortenbergh 100 • 1000 Brussels • Belgium • Tel +32 2 741 09 50 • Fax +32 2 741 09 51 • info@entsoe.eu • www.entsoe.eu

## Answer to FAQ 23:

**How can the interaction between HVDC converters and other elements of the grid be addressed?**

Where power electronic equipment like HVDC Converter Stations, PPMs, other equipment are connected to a network within close electrical proximity of each other, there is a risk of interaction between them, especially if the network is “weak” with a low short circuit power.

In order to address the interaction, different simulation tools and models of the equipment have to be used depending on the frequency ranges of interest. The phenomena to be investigated cover a broad spectrum such as steady state phenomena, electromechanical oscillations, small-signal effects, large-signal effects, oscillations, sub-synchronous resonances, electromagnetic transients, high frequencies phenomena and harmonic resonances.

Voltage and power stability of AC networks with HVDC systems should be investigated by evaluation of the capacity of the AC network to exchange the power with the HVDC system. For a single HVDC in-feed the Effective Short Circuit Ration, the Voltage Stability Factor and the Maximum Power Curve are general accepted indicators that can be used.

Small signal stability analysis may be used to investigate electromechanical effects. Coordination of controls may be investigated by the use of stability programs and eigenvalue analysis supplemented by transient stability programs and electromagnetic transient programs.

Large signal effect and the effects of nonlinear controls should be investigated in digital real time simulators or in electromagnetic transient programs.

The study of this interaction requires adequate input of data and models. For this purpose the requirement to deliver this input to reasonable extent could also cover existing users (generation, demand or HVDC systems).



ENTSO-E AISBL • Avenue de Cortenbergh 100 • 1000 Brussels • Belgium • Tel +32 2 741 09 50 • Fax +32 2 741 09 51 • info@entsoe.eu • www.entsoe.eu

## Answer to FAQ 24:

**Why is power quality included the NC HVDC and why are there no specific standards referred to for Power Quality?**

The HVDC System and any associated equipment thereof shall not introduce voltage distortion or fluctuation onto the supply system to which it is connected, beyond the value(s) allowed by the relevant TSO. TSOs have different harmonic emissions and standards and the TSO also has to make sure that harmonic level is not infringed when power electronic devices are connected at TSO level aiming to not jeopardize the harmonic level in the system with consequences on the stability of users connected to system.

The NC HVDC sets a requirement on Power Quality, as well as NC DCC and differently to NC RfG because HVDC equipment constitutes a natural source of harmonics and waveform distortion considering the conversion AC/DC and DC/AC. For this reason ENTSO-E argues the application of Power Quality standards is a cross-border subject in case of the NC HVDC. In addition to the effect that Power Quality may have within the transmission network, it is a phenomenon that may also affect the distribution network and their users. Feedback from the NC HVDC User Group supported the proposal to include power quality requirements on HVDC Systems in the scope of the code.

However, the NC HVDC does not set the specific standard for Power Quality because it is a very local network dependant issue. Also where today some areas may not have Power Quality related problems, depending on how the demand, generation and topology changes in future, the probability may very well increase. The impact of and the mitigation countermeasures against Power Quality problems, can be solved through local standards to prevent the cross border effects on the voltage waveform distortions.

The term Power Quality is related to the degree of the distortion of the ideal sinusoidal waveform. This waveform distortion can be mathematically analysed to show that it is equivalent to superimposing additional frequency components onto a pure sine wave. These frequencies are harmonics (integer multiples) of the fundamental power system frequency (50Hz) which starts with the fundamental frequency, and can sometimes propagate outwards from nonlinear loads, causing problems elsewhere on the power system. One of the major effects of power system harmonics is that it can increase currents in the network. This is particularly the case for the third harmonic (causing resonance), which causes a sharp increase in the zero sequence current, and therefore increases the current in the neutral conductor or earthings. This effect can require special consideration in the design of HVDC power systems connecting non-linear equipment and components.

In addition to the increased line current, different electrical equipment can suffer the effects from harmonics on the power system connected several kilometres away from the source. For example, electric motors can experience hysteresis loss caused by eddy currents set up in the iron core of the motor. These are proportional to the frequency of the current. Since the harmonics are at higher frequencies, they produce more core loss in a motor than the fundamental frequency would. This results in increased heating of the motor core, which (if excessive) can shorten the life of the motor. The 5th harmonic may cause a counter electromotive force in large grid connected motors which acts in the opposite direction of rotation.



ENTSO-E AISBL • Avenue de Cortenbergh 100 • 1000 Brussels • Belgium • Tel +32 2 741 09 50 • Fax +32 2 741 09 51 • info@entsoe.eu • www.entsoe.eu

## Answer to FAQ 25:

**Why is the data model exchange essential?**

Data model exchange is essential in general for all the equipment connected to the transmission network, but is even more important in the case of HVDC systems and DC connected PPMs because of the significant impact that this equipment may have on the network:

- The amount of transmitted power is likely to be higher than in the case of individual devices connected to the transmission network.
- HVDC systems have not the same behaviour patterns as the traditional HVAC assets, so it is essential to have adequate models so as to predict the interaction between the HVDC and HVAC systems.. TSO tasks and responsibilities such as planning and operation, continuous evaluation of the power system, scheduling, contingency analysis, transient stability studies, short circuit calculation, electromagnetic transient coordination studies, protection system coordination, etc… would not be possible if the TSO could not rely on accurate modelling of these network assets.
- In such cases where the owner of the DC-connected PPM and the owner of the HVDC System are different owners, maybe different from the TSO, and maybe involving different manufacturers, it is essential that the TSO has the right to specify the format and conditions of the simulation model in order to guarantee that they are coherent and give the relevant input to conduct these analyses.

The Relevant TSO shall also have the right to specify the format and software platform on which the model is programmed as well as the way to guarantee the availability of the model along the lifetime of the equipment as new software versions are developed continuously. On the other hand, the Relevant TSO has an obligation to confirm and guarantee the confidential nature of the delivered simulation models.

In order to check that the simulation model is accurate, it shall be verified against the real behaviour diagrams of the device, at least by means of the tests carried out within the Compliance chapter of the Network Code. If the simulation results are verified, then the model could be used to evaluate other technical capabilities of the HVDC or DC-connected PPM as stated within the Compliance Simulation requirements of this Network Code.

Data model exchange is essential for every new HVDC connection study .It is also essential that the TSO provides the manufacturer with an accurate and relevant network data so that the HVDC System manufacturer or owner can perform the needed studies, obtain the most reliable results and design the installation according to the given network conditions.



ENTSO-E AISBL • Avenue de Cortenbergh 100 • 1000 Brussels • Belgium • Tel +32 2 741 09 50 • Fax +32 2 741 09 51 • info@entsoe.eu • www.entsoe.eu

## Answer to FAQ 26:

**Why does the NC HVDC allow for different requirements compared to those in NC RfG?**

AC collection networks are commonly small synchronous systems, but occasionally with very high imbalance of demand and generation.

In many instances given the expectation that these AC collection networks can be expected to see an increase in AC connections (circuits and grid users) but also in DC connections (circuits which may also be interconnectors). The added AC connections based on previous analysis may also connect these AC collection networks to other AC collection networks or to the larger Synchronous Areas networks. The latter would make the AC collection network an inherent part of a main Synchronous Area.

Therefore, the functional capabilities placed on AC collection networks in many instances are consistent and compatible with those of any other AC network, with the need to manage voltage, frequency, cope with disturbances and facilitate maintenance. Therefore many requirements are identical in nature, and are often future proofed to what can be reasonably be expected to happen over the life of the plant and equipment of the AC collection network and the users connected to them. This includes potential development or modernization of these networks.

However due primarily to the larger imbalance of demand and generation in the AC collection networks and the opposing forces they normally apply to each other to dampen changes on the network, the need to manage frequency and voltage needs to be carefully addressed. The small size of these networks also means that the inherent system strength of the network is lower as well its dampening effects.

Therefore some NC RfG requirements need to be modified or added to account for these phenomena. It should be noted that the NC RfG provides the minimum requirements with the possibility for example in frequency requirements for wider ranges to be required. These are included in part to account for the same effects of system segregation of a larger Synchronous Area which as a result may become very similar in behaviour to an AC collection network.



ENTSO-E AISBL • Avenue de Cortenbergh 100 • 1000 Brussels • Belgium • Tel +32 2 741 09 50 • Fax +32 2 741 09 51 • info@entsoe.eu • www.entsoe.eu

## Answer to FAQ 27:

**Which design requirements apply to the AC collection Network of a DC-Connected Power Park Module?**

The design requirements that apply to the offshore AC collection network are broadly consistent with those for that are AC connected. This includes the requirements for both the DC-Connected Power Park Module[s] and HVDC Convertor Unit[s].

Several offshore grid studies[8] where the majority of the DC-Connected Power Park Modules are likely to exist show a natural progression from a radial to an increasingly meshed grid, with connection hubs for multiple users. These networks often act to connect generation and interconnection between AC networks, as well as being symbiotic with the AC networks to which they connect.

As such these networks become part of the main network and their reliability, flexibility and operability is required to be at an equivalent level to any other AC node on the network. It is therefore necessary to require the same functionality from these HVDC systems and DC-connected Power Park Modules.

Onshore DC-Connected Power Park Modules are only likely to be connected at DC given the costs involved if the connection point into the Network is very remote from their location and/or technical difficulties drive a DC decoupled connection (i.e. fault levels, or stability reasons). Therefore any other development in the area is also likely to experience the same restrictions and their connection into the HVDC System is highly likely. Therefore to ensure the non-discriminatory treatment of the connection of any new users to the HVDC System the reliability and quality of supply from the HVDC System should be comparable to the AC Network to which it is connected.

However in the NC HVDC also addresses situations where the DC-Connected Power Park Module is connected to a dedicated HVDC System from which:

1. no other user conceivably is going to be connected to;
2. which is not going to become part of the meshed network, and;
3. which is not going to become part of an interconnection to another AC network or Synchronous Area;

The requirements to provide reactive power may be omitted (at the owner accepted reduced reliability to the DC-Connected Power Park Module). This requirement may only be omitted where the Relevant TSO is able to demonstrate that:

1. the reduced reliability of the DC-Connected Power Park Module does not have a material financial impact to other users through cost benefit analysis;
2. HVDC system is not going to be developed from before Reactive Power capability can be retrofitted to the DC-Connected Power Park Module;
3. that contractual arrangements are in place to ensure that the Reactive Power capability will be fitted when required for the wider Network.

This approach ensures a balance between non-discrimination of other users on the Network to the joint contribution of all users to Reactive Power provision and enforcing unnecessary capabilities that are not justified by the Relevant TSO on a user.

Other requirements may not be practically and/or cost effectively be retrofitted for example voltage or frequency ranges and must be incorporated in the initial design of the DC-Connected Power Park Module or HVDC System.

[8] NSCOGI, Eirgrid Offshore, Greenpeace study



ENTSO-E AISBL • Avenue de Cortenbergh 100 • 1000 Brussels • Belgium • Tel +32 2 741 09 50 • Fax +32 2 741 09 51 • info@entsoe.eu • www.entsoe.eu

## Answer to FAQ 28:

**What happens in case the HVDC System is owned and/or operated by another party than the onshore TSO and the offshore wind farm(s)?**

In this situation the requirements of the NC HVDC will be provided by and compliance will be the responsibility of the Owner of the HVDC System.

Similarly the requirements of the DC-Connected Power Park Module will be provided by and compliance will be the responsibility of the Owner of the DC-Connected Power Park Module.

Any requirement which requires the contribution of both parties to be met and demonstrated then the responsibility to demonstrate this requirement will be with the HVDC System Owner as the connecting party to the Relevant TSO for the AC Network which the HVDC System is connecting to.



ENTSO-E AISBL • Avenue de Cortenbergh 100 • 1000 Brussels • Belgium • Tel +32 2 741 09 50 • Fax +32 2 741 09 51 • info@entsoe.eu • www.entsoe.eu