ENTSO-E – NC HVDC Code

Peter W. Christensen Vestas Wind Systems A/S, Denmark

2. HVCC Users Group Meeting

Brussels, June 11, 2013

DISCLAIMER

Information contained in the following expresses general views and shall merely be viewed as a contribution to the debate on the potential of wind turbines in general.

Information contained in the following shall not be construed as an expression of the policies or views of Vestas or as a detailed description of the properties or functioning of wind turbines manufactured by Vestas.

The document is created by Vestas and contains copyrighted material, trademarks, and other proprietary information. All rights reserved. No part of the document may be reproduced or copied in any form or by any means—such as graphic, electronic, or mechanical—without the prior written permission of Vestas. The use of this document by you, or anyone else authorized by you, is prohibited unless specifically permitted by Vestas

PPC-point definitions

The first very essential step

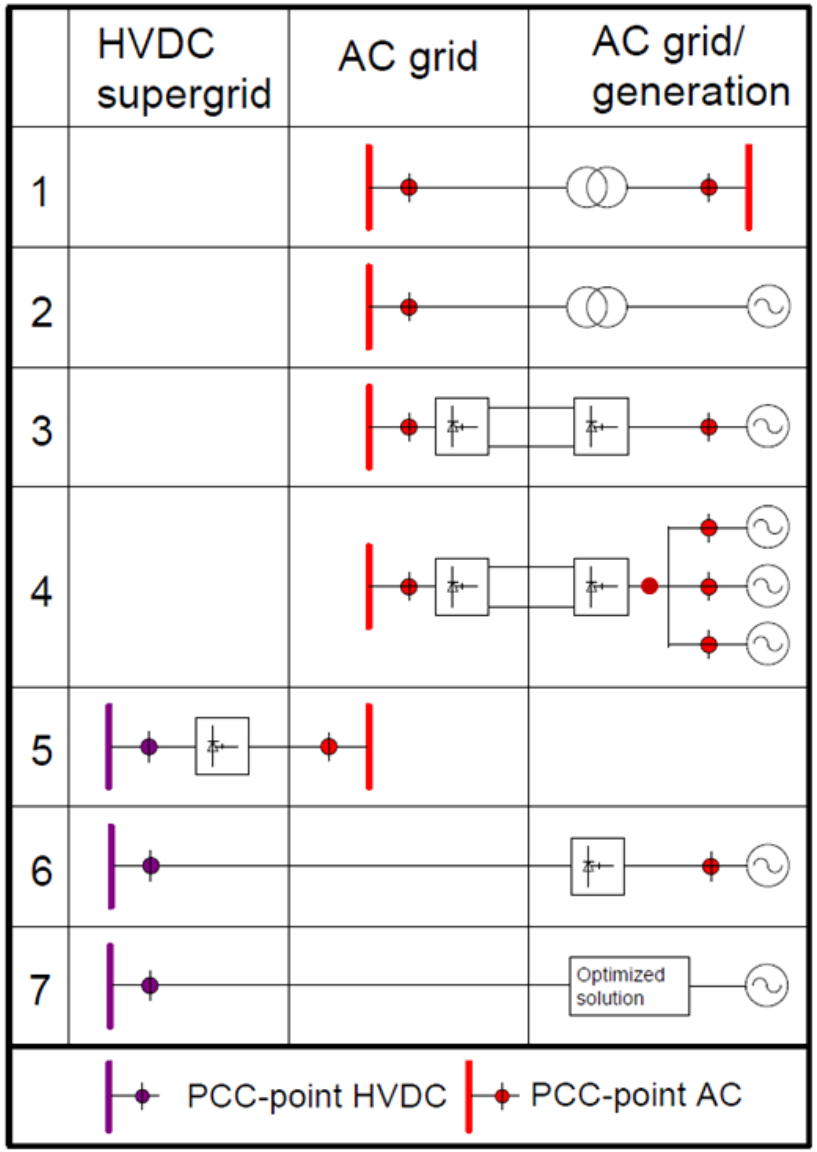

Wind. It means the world to us.™

Structural interrelation between AC, DC and PPM grids

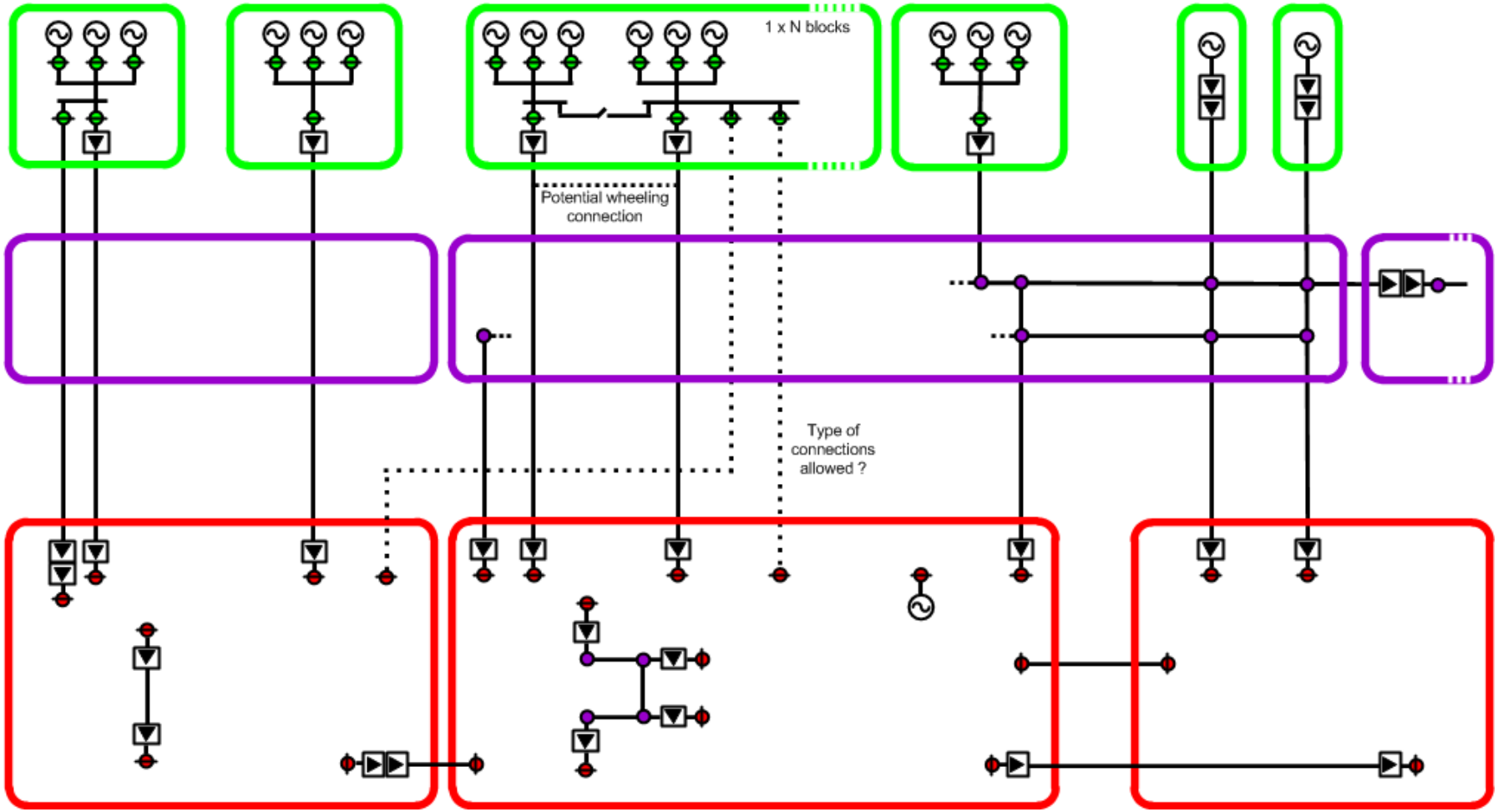

We need common building rules – European dimension …

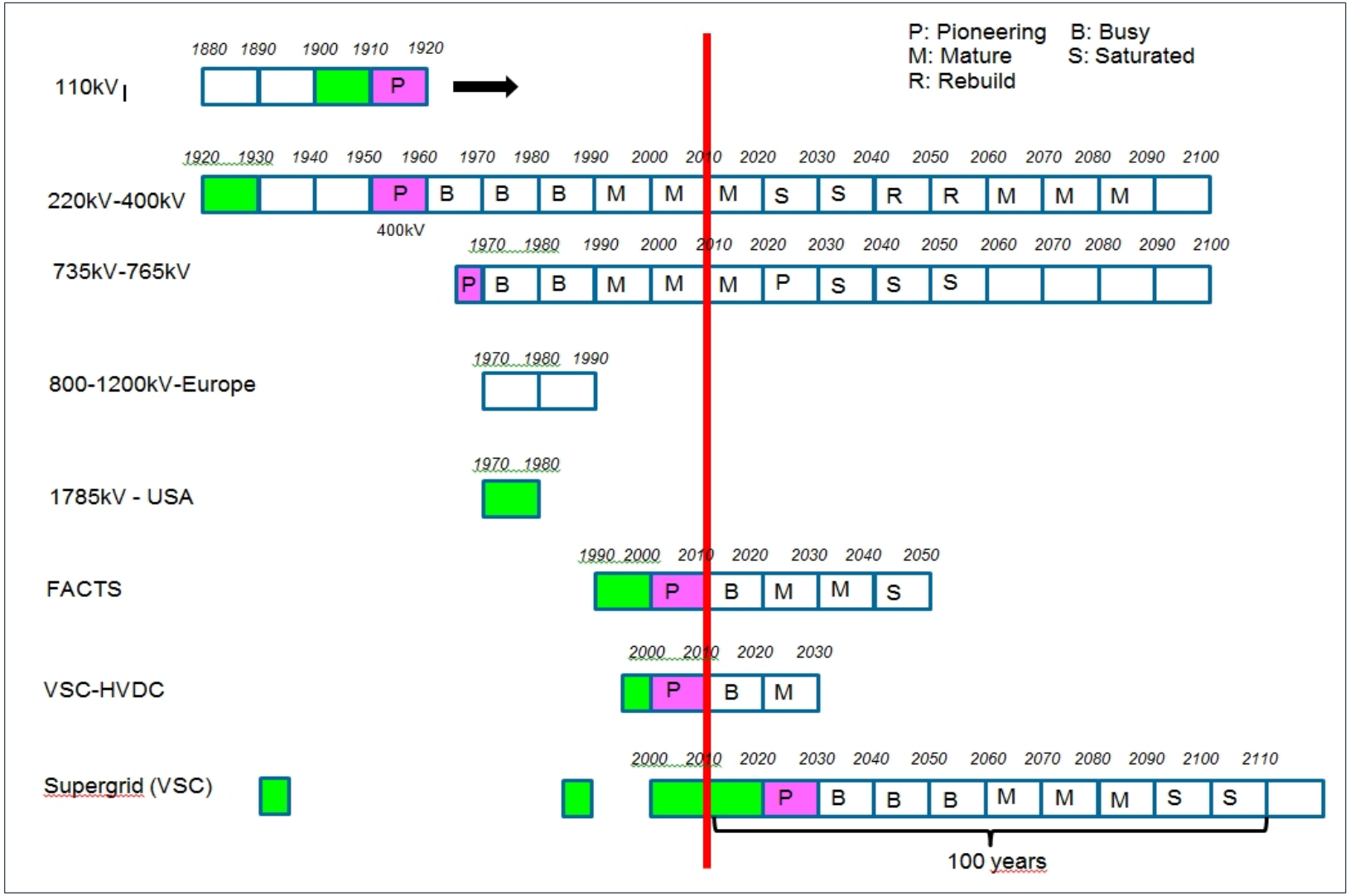

Wind. It means the world to us.™