Ad hoc Group

"Geographical Distribution of Reserves"

Document 1:

Basic Framework and Current State

Version 1.0 – July 2005

Table of Contents

0. Introduction....3
1. Definition of Reserve Types....4
1.1 General Definition....4
1.2 Reserve Types related to Frequency – Control....4
1.2.1 Primary Control Reserve....4
1.3 Reserve Types related to Load - Frequency – Control....5
1.3.1 Secondary Control....5
1.3.2 Tertiary Control....6
1.3.3 Different Types of Tertiary Control Reserve Activation....6
1.3.4 Amount of Reserve needed....9
2. Basic Technical Framework....11
2.1 Border – Crossing Primary Control Reserve....11
2.1.1 Technical Realisation....11
2.1.2 Technical Requirements for a Generation Unit....12
2.1.3 Responsibility of TSOs involved in the process....12
2.1.4 Monitoring....12
2.1.5 General Procedure....12
2.1.6 Information exchange....13
2.2 Border – Crossing Secondary Control Reserve....14
2.2.1 Technical Realisation - Adaptation of the Load–Frequency Control....14
2.2.2 Conditions for a generation unit....16
2.2.3 Responsibility of TSOs involved in the process....17
2.2.4 Monitoring....18
2.2.5 General Procedure....18
2.2.6 Information exchange....19
2.3 Border – Crossing Tertiary Control Reserve....20
2.3.1 Technical Realisation - Adaptation of the Load–Frequency Control....20
2.3.2 Conditions for a generation unit....22
2.3.3 Responsibility of TSOs involved in the process....23
2.3.4 Monitoring....24
2.3.5 General Procedure....24
2.3.6 Information exchange....25
3. Current State....26
3.1 Primary Control Reserve....26
3.2 Secondary Control Reserve....27
3.3 Tertiary Control Reserve....27

0. Introduction

In general a physical geographical distribution of technical reserves is necessary in order to cope with geographical and technical constraints within the UCTE synchronous area (such as the additional transport in case of emergencies) and to avoid reserve problems in case of islanding of a partner. The geographical distribution is performed so far according to the existing UCTE rules:

- corresponding to the production physically located in the control areas / control blocks (primary control)
- determined by the individual control area / control block according to their characteristics and needs (secondary / tertiary control)

The increasing liberalisation tends to consider "reserve as a commodity" with the possibility of unconstrained tendering and contracting. Currently in some countries the regulatory authorities charge the TSOs to organise auctions of power for primary, secondary and tertiary control. In this case, the financial responsibility for the share of reserve remains at the single TSO according to the current rules, but the physical delivery of reserve may change within the limits. A possible consequence of treating reserve as a commodity is to open the market over the borders of the TSOs, i.e. to adapt the distribution of the physical delivery of reserves.

In this context the question arises, which kind of reserves can be purchased over a border between two control areas / control blocks and which minimal percentage of the power reserves shall remain in each control area / control block. Thus the main task of the analysis of "Geographical Distribution of Reserves" is to investigate which kind of reserve can be purchased over a border between two control areas / control blocks (consider primary control, secondary control and tertiary control) and what are the physical / security limits and organisational constraints. The analysis is performed purely from a technical/operational point of view, i.e. not fixed to the current UCTE rules. It is obvious that a certain degree of distribution of reserves will have to be maintained.

The results of the analysis of "Geographical Distribution of Reserves" are documented in a set of seven papers:

1. "Basic Definitions and Current State"
2. "Border – Crossing Exchange of Reserves - Use of Transmission Capacity"
3. "Border – Crossing Exchange of Primary Reserve"
4. "Border – Crossing Exchange of Secondary Reserve"
5. "Border – Crossing Exchange of directly activated Tertiary Reserve"
6. "Border – Crossing Exchange of schedule activated Tertiary Reserve"
7. "Glossary of Terms"

Terms printed in CAPITAL FORMAT are defined within the document "Glossary of Terms".

1. Definition of Reserve Types

1.1 General Definition

The interaction of the different Control Types "PRIMARY CONTROL", "SECONDARY CONTROL" and "TERTIARY CONTROL" with the control aim of the system frequency is shown in figure 1. In case of a deviation of the system frequency, as a first step the PRIMARY CONTROL is activated in order to limit the frequency deviations. As a second step, the SECONDARY CONTROL is activated, which frees up the PRIMARY CONTROL and restores the system frequency to the set value. In a third step the TERTIARY CONTROL frees up the SECONDARY CONTROL. In the case that the amount of SECONDARY CONTROL is not sufficient to free up the PRIMARY CONTROL the TERTIARY CONTROL has to overtake this part and to restore the frequency accordingly.

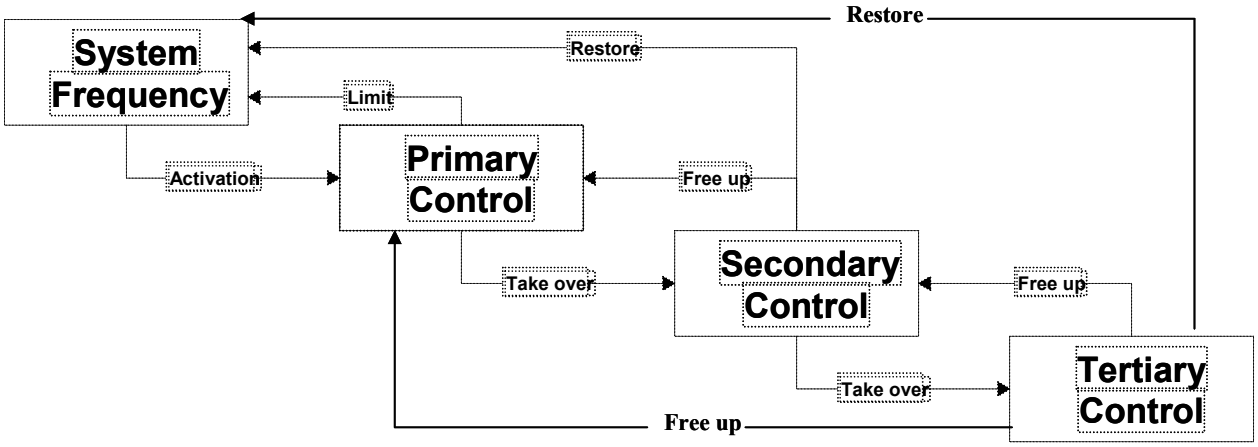

Fig. 1: Interaction of different control types

1.2 Reserve Types related to Frequency – Control

1.2.1 Primary Control Reserve

The objective of PRIMARY CONTROL is to maintain a balance between generation and consumption (demand) within the Synchronous Area, thus contributing to the keeping of the system frequency at its desired value. This is achieved by the use of frequency controlled turbine governors. By the joint action of the generation units of all interconnected undertakings / TSOs, PRIMARY CONTROL aims the operational reliability for the power system of the Synchronous Area and stabilises the system frequency at a stationary value after a disturbance or incident within the time-frame of seconds, but without restoring the values of system frequency to the set point value and power exchanges between CONTROL AREAS / BLOCKS to the scheduled values.

According to the rules of UCTE, the maximum power deviation to be handled by PRIMARY CONTROL is set for a reference incident of 3000 MW, assuming realistic characteristics concerning system reliability and size of loads and generation units.

The PRIMARY CONTROL RESERVE must be physically distributed as evenly as possible between the different regions (usually the CONTROL AREAS / BLOCKS) in the synchronous

area and within these regions. PRIMARY CONTROL must be available continuously, not depending on the unit commitment in detail. The action of PRIMARY CONTROL starts within seconds after the beginning of the incident and its function is a power contribution to the system in order to restore overall balance between generation and consumption.

Each CONTROL AREA / BLOCK must contribute to the PRIMARY CONTROL RESERVE as required. The respective shares are defined by multiplying the calculated reserve for the entire synchronous area by the contribution coefficients Ci of the various CONTROL AREAS / BLOCKS. According to UCTE rules, the contribution coefficients of the areas are based on the share of the energy generated in the area within one year in relation to the total for the entire synchronous area. The sum of all shares must result to the total PRIMARY CONTROL RESERVE.

1.3 Reserve Types related to Load - Frequency – Control

1.3.1 Secondary Control

The aim of SECONDARY CONTROL is to maintain a balance between generation and consumption (demand) within each CONTROL AREA / BLOCK according to the agreed (scheduled) Exchange Programs, without impairing the PRIMARY CONTROL operating in the Synchronous Area. SECONDARY CONTROL makes use of a centralised automatic control (Load – Frequency Control) modifying the actual power set points of generation sets in order to achieve full compensation of the error within the time frame of typically 15 minutes. SECONDARY CONTROL is based on SECONDARY CONTROL RESERVE that must be under automatic control. Adequate SECONDARY CONTROL requires generation resources made available by generation companies to the TSOs.

Within each CONTROL AREA / BLOCK, the individual Area Control Error (ACE) needs to be controlled to zero on a continuous basis. The ACE is calculated as the sum of the power control error and the frequency control error. Each CONTROL AREA / BLOCK must be operated by an individual TSO that has the responsibility for the transmission system operation of this area (usually coincident with the territory of a company or a country), including the responsibility for availability, operation and provision of SECONDARY CONTROL to maintain the power interchange of his CONTROL AREA / BLOCK at the scheduled value and, consequently, to support the restoration of frequency deviations in the interconnected network. In order to control the ACE to zero, SECONDARY CONTROL must be performed in the corresponding control centre by a single automatic secondary controller that needs to be operated on-line and in closed-loop.

An adequate SECONDARY CONTROL RESERVE must be available continuously. In case of the loss of a generating unit the SECONDARY CONTROL RESERVE is activated automatically. The function of SECONDARY CONTROL RESERVE is not only a fast power contribution but also an energy contribution to the system. TERTIARY CONTROL RESERVE (minute reserve) will be required to offset the shortfall and to release the activated SECONDARY CONTROL RESERVE.

1.3.2 Tertiary Control

TERTIARY CONTROL uses TERTIARY CONTROL RESERVE that is usually activated manually by the TSOs when SECONDARY CONTROL has been activated, in order to free up the SECONDARY CONTROL RESERVE in the course of Load – Frequency Control. Its function is an energy contribution to the system. TERTIARY CONTROL is typically operated in the responsibility of the TSO.

TERTIARY CONTROL RESERVE are activated by either changing the generation schedules within the CONTROL AREA / BLOCK or by updating the total exchanges schedule of the CONTROL AREA / BLOCK.

1.3.3 Different Types of Tertiary Control Reserve Activation

TERTIARY CONTROL uses TERTIARY CONTROL RESERVE that is usually activated manually by the TSOs in case of (expected) sustained activation of SECONDARY CONTROL. It is therefore used to free activated SECONDARY CONTROL RESERVE in a balanced system situation but it is also activated as a supplement to SECONDARY CONTROL RESERVE after larger incidents to restore the system frequency and consequently free the system wide PRIMARY CONTROL RESERVE within the required 15 minute restoration time.

TERTIARY CONTROL RESERVE is typically operated in the responsibility of the TSO. It is activated for a period of time with a fixed value and can therefore be considered as "Energy" reserve. Any kind of energy reserve used for frequency restoration or freeing up SECONDARY CONTROL RESERVE is considered TERTIARY CONTROL RESERVE. TERTIARY CONTROL RESERVES are activated by either changing the generation schedules within the CONTROL AREA / BLOCK, by adjustments of controllable loads or by updating the total exchanges schedule of the CONTROL AREA / BLOCK.

When analysing the border – crossing exchange of TERTIARY CONTROL RESERVE it is essential to distinguish the different modes of TERTIARY CONTROL RESERVE activation. The figures 2 -4 introduce the definition of the "DIRECTLY ACTIVATED TERTIARY CONTROL RESERVE" and the "SCHEDULE ACTIVATED TERTIARY CONTROL RESERVE":

- SCHEDULE ACTIVATED TERTIARY CONTROL RESERVE (figure 2): The TERTIARY CONTROL RESERVE is activated with relation to a pre - defined time frame of exchange schedules, e.g. 15 min. A special kind of exchange schedule is used.
- DIRECTLY ACTIVATED TERTIARY CONTROL RESERVE (figure 3): The TERTIARY CONTROL RESERVE can be activated at any time, independent from a time frame of to exchange schedules. The activation procedure results in a dynamically changing exchange pattern.

Figure 4 shows the resulting interaction of SECONDARY CONTROL RESERVE, DIRECTLY ACTIVATED TERTIARY CONTROL RESERVE and SCHEDULE ACTIVATED TERTIARY CONTROL RESERVE.

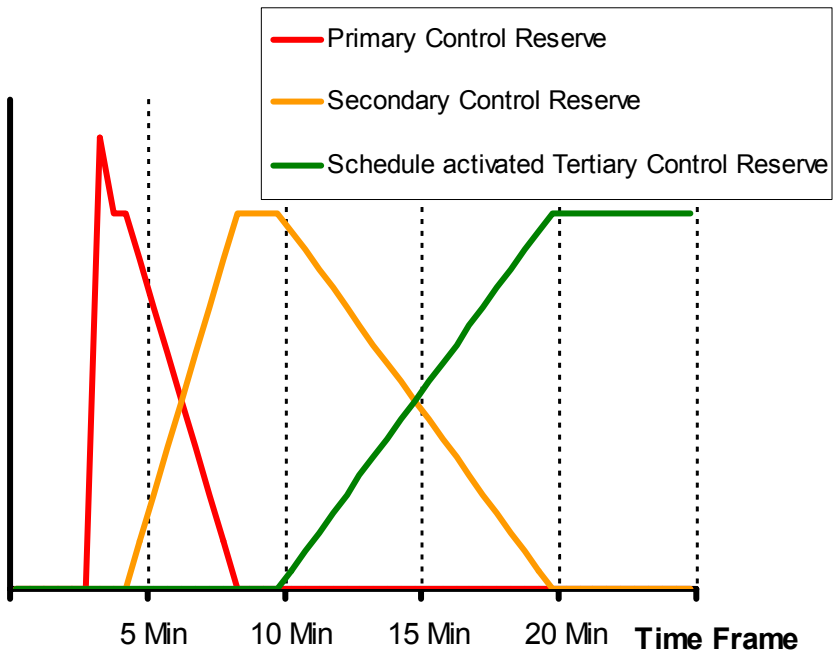

Fig. 2: SCHEDULE ACTIVATED TERTIARY CONTROL RESERVE

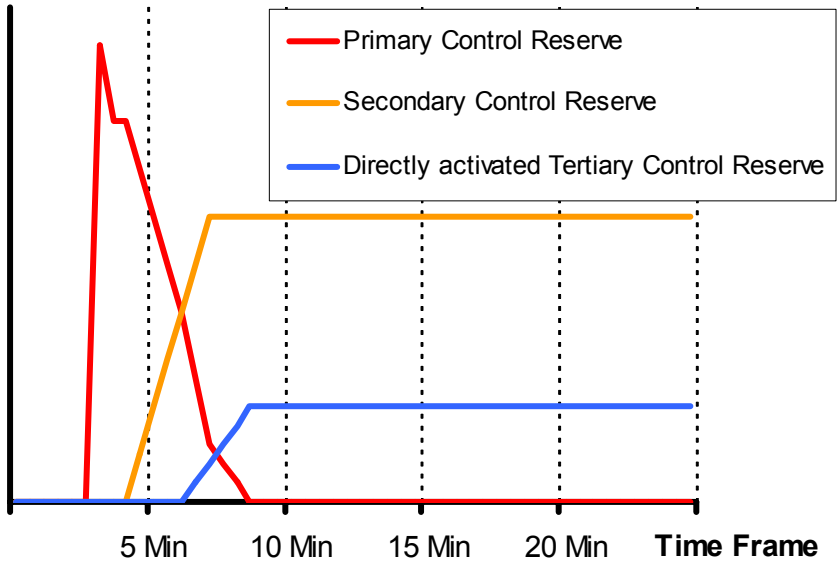

Fig. 3: DIRECTLY ACTIVATED TERTIARY CONTROL RESERVE

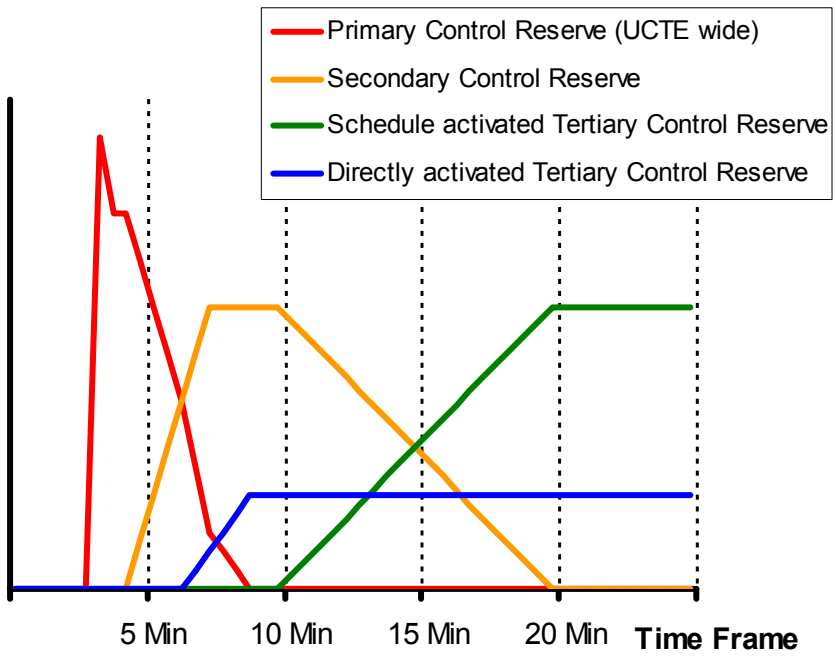

Fig. 4: Combined use of DIRECTLY ACTIVATED TERTIARY CONTROL RESERVE and SCHEDULE ACTIVATED TERTIARY CONTROL RESERVE

A summary of the different reserve types defined is given in table 1. PRIMARY CONTROL RESERVE is used in the process of Frequency Control for a fast reaction on a generator outage. The Load – Frequency Control uses SECONDARY CONTROL RESERVE in order to free up PRIMARY CONTROL RESERVE and temporarily maintain balance until the activation of TERTIARY CONTROL RESERVE and to correct the system imbalance, e.g. the load noise. The load noise corresponds with the short term volatile load changes that are balanced within an accounting period. TERTIARY CONTROL RESERVE is activated for a period of time with a fixed value and can therefore be considered as "Energy" Reserve. Any kind of Energy Reserve used for frequency restoration or freeing up SECONDARY CONTROL RESERVE is considered TERTIARY CONTROL RESERVE.

Two types of TERTIARY CONTROL RESERVE can be recognised.

- First, "DIRECTLY ACTIVATED TERTIARY CONTROL RESERVE" which is activated at a random point within a scheduling / accounting Time Frame and lasts till the end of a Time Frame. DIRECTLY ACTIVATED TERTIARY CONTROL RESERVE is used for frequency restoration after large disturbances, as a supplement to the automatically activated and continuously updated SECONDARY CONTROL RESERVE. Thus DIRECTLY ACTIVATED TERTIARY CONTROL RESERVE frees up part of PRIMARY CONTROL RESERVE and finally maintains the balance.
- Second, "SCHEDULE ACTIVATED TERTIARY CONTROL RESERVE" is activated for one or more complete scheduling / accounting Time Frames, starting at a Time Frame boundary. Its purpose is to free up SECONDARY CONTROL RESERVE and finally maintain the balance and to balance the load forecast errors.

Aim	Means	Outage of generator	Load variations
Frequency control	Primary control reserve	Fast reaction on generator outage	Fast reaction on Load variations causing frequency deviations
Load – Frequency control	Secondary control reserve	Free up Primary Control Reserve and temporarily maintain balance until the activation of Tertiary Control Reserve	Correct the system imbalance e.g. load noise
Reserve Restoration	Directly activated tertiary reserve	In case of a generator outage inside the area: if necessary complement the Secondary Control Reserve by freeing up part of Primary Control Reserve and finally maintaining the balance	
	Scheduled activated tertiary reserve	In case of an imbalance inside the area: free up Secondary Reserve and finally maintain balance	Balancing of Load Forecast errors

Table 1: Overview of the reserve types defined

1.3.4 Amount of Reserve needed

The amount of SECONDARY CONTROL RESERVE needed is determined by each TSO on its own on the basis of the individual situation within the CONTROL AREA / BLOCK. The reserve amount must be sufficient to follow the rules / requirements concerning Load – Frequency Control as defined in the UCTE Operation Handbook, Policy 1.

Concerning the amount of reserve needed, there is only a minimum requirement in the UCTE Operation Handbook that corresponds with the control of the load noise. In CONTROL AREAS / BLOCKS of different sizes, load variations of varying magnitude must be corrected in less than15 minutes. To this end, the recommended minimum reserve related to load variations should be based according to the following formula:

$$R = \sqrt{a\,L_{\max} + b^2} - b$$

R= the recommended minimal amount of SECONDARY CONTROL RESERVE in MW

L_{max}= the maximum anticipated consumer load in MW for the CONTROL AREA over the period considered. The parameters a and b are established empirically with the following values: a = 10 MW and b = 150 MW.

Each CONTROL AREA should have access to an amount of TERTIARY CONTROL RESERVE that equals at least the size of the largest unit to be able to replace activated PRIMARY AND SECONDARY CONTROL RESERVE after the loss of this unit. The total amount of TERTIARY CONTROL RESERVE can be a combination of different available components (e.g. reserved by

the TSO, TSO-TSO co-operation, reserved by the market). The DIRECTLY ACTIVATED part of the TERTIARY CONTROL RESERVE should be large enough to cover the need of restoration of the network frequency and activated PRIMARY CONTROL RESERVE after an incident within the CONTROL AREA, when the available SECONDARY CONTROL RESERVE is not sufficient to achieve this within the 15 minute timeframe. The remaining amount of required TERTIARY CONTROL RESERVE (SCHEDULE ACTIVATED) is needed to free the activated SECONDARY CONTROL RESERVE after the balance restoration. A CONTROL AREA with an extra amount of SECONDARY CONTROL RESERVE above the recommended amount (see above) can lower the TERTIARY CONTROL RESERVE requirement with that extra amount.

For the determination of the amount of reserve needed the local recovery of imbalance (GenCo, BRP, etc., depending on the market system) can be taken into account.

2. Basic Technical Framework

2.1 Border – Crossing Primary Control Reserve

2.1.1 Technical Realisation

The technical realisation described fits to the contractual relation of border – crossing exchanging of PRIMARY CONTROL RESERVE from a generation company (GenCo) as well as from another TSO.

2.1.1.1 Local Adaptation of Generation Units

The primary controller of a generation unit must be set at least to the contracted limits for the sensitivity, the frequency droop factor (Δf / f_{nom} divided by ΔP / P_{nom}), and the active power amount (PRIMARY CONTROL reservation).

2.1.1.2 Adaptation of LFC of RESERVE CONNECTING and RECEIVING TSO

The contracted values and the contracted interval of the PRIMARY CONTROL RESERVE contract must be known and accepted by the RESERVE RECEIVING TSO and the RESERVE CONNECTING TSO. Both TSOs must incorporate the relevant contracted values into their LFC, for the correct intervals.

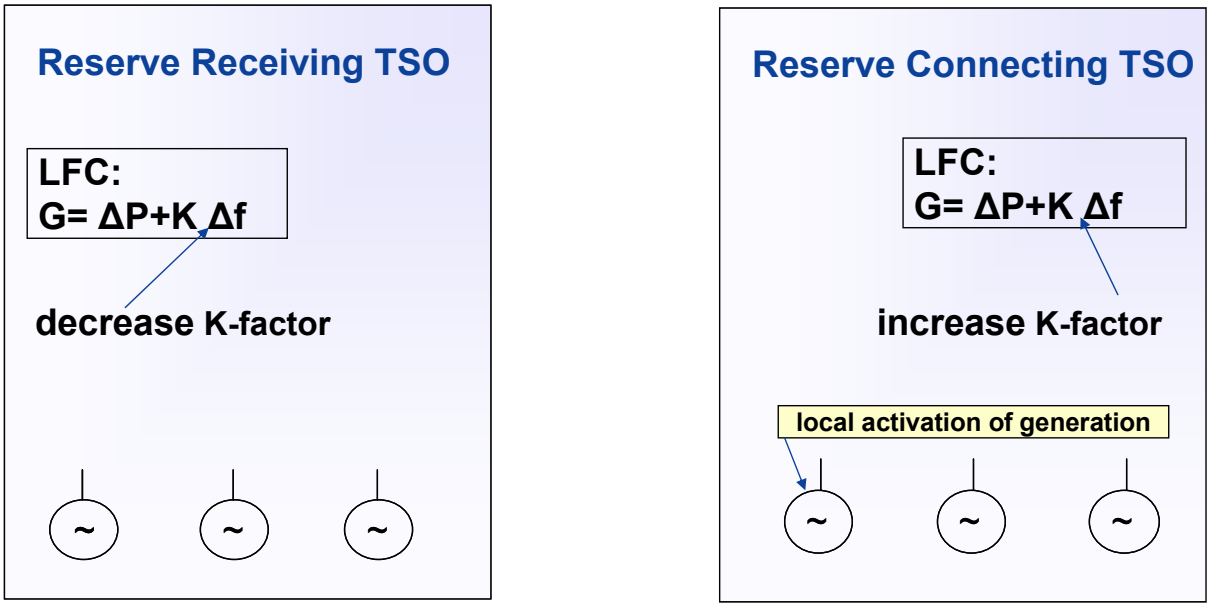

Fig. 5: Technical Realisation of PRIMARY CONTROL RESERVE across the border

2.1.2 Technical Requirements for a Generation Unit

In order to avoid unverifiable PRIMARY CONTROL contributions to multiple TSOs, a generation unit should have a PRIMARY CONTROL RESERVE contract with only one TSO. For a generation unit, it is not recommended to split the PRIMARY CONTROL RESERVE over different RESERVE CONNECTING TSO for practical organisational reasons (monitoring, risk in the case of outage of the generator providing the reserve).Thus it is proposed that each generation unit can not have more than one contract of PRIMARY CONTROL RESERVE.

In addition, a generation unit has to comply with technical conditions in accordance with what is demanded by UCTE rules, in terms of response, and what is demanded by the RESERVE RECEIVING TSO and the RESERVE CONNECTING TSO.

2.1.3 Responsibility of TSOs involved in the process

a) In the case of TSO – TSO contract:
The RESERVE CONNECTING TSO is responsible for the primary contribution of the CONTROL AREA, including accepted PRIMARY CONTROL contributions from generation units within its CONTROL AREA for a RESERVE RECEIVING TSO.

b) In the case of TSO – GenCO contract:
The RESERVE RECEIVING TSO is responsible for the primary contribution of its CONTROL AREA, including contracted cross-border PRIMARY CONTROL contributions.

2.1.4 Monitoring

Monitoring is executed by the RESERVE CONNECTING TSO. Monitoring is based on the generation unit active power measurements, located at the network injection point in the network of the RESERVE CONNECTING TSO. The contract volume must be compatible with the measurement accuracy for the individual generation unit to enable monitoring.

2.1.5 General Procedure

The RESERVE RECEIVING TSO has concluded a contract with the generation unit located in the CONTROL AREA of the RESERVE CONNECTING TSO with the specification of:

– the contracted volume of power for PRIMARY CONTROL - P_{px},

– time of transaction beginning - t_{beg}, time of transaction termination - t_{ter}.

At the time t_{beg}, both the RESERVE RECEIVING TSO and the RESERVE CONNECTING TSO change the settings of the K_{ri}-factor value on their load-frequency controllers according to the results of the calculations according to the determined procedure. At the time t_{ter}, both the RESERVE RECEIVING TSO and the RESERVE CONNECTING TSO re-set the K_{ri}-factors to their original values.

2.1.6 Information exchange

2.1.6.1 Information procedure between the TSOs involved in the process

The RESERVE RECEIVING TSO communicates to the RESERVE CONNECTING TSO before the beginning resp. the termination time of any exchanging transaction of power for PRIMARY CONTROL by which amount the value of its K factor must be increased and decreased.

2.1.6.2 Information procedure between TSOs within the CONTROL BLOCK with pluralistic control mode

Both, the RESERVE RECEIVING TSO and the RESERVE CONNECTING TSO, communicate the changed and re-set K-factors' values to the block co-ordinator at the beginning and at the termination time of any exchanging transaction of power for PRIMARY CONTROL.

The block co-ordinator verifies for each single exchanging transaction whether the total sum of the new K_{ri}^{*}-factors' values in the power systems involved in the transaction is equal to the total sum of the original factor values:

$$K_{r,\,^{*}Rec} + K_{r,\,^{*}Con} = K_{r,\,Rec} + K_{r,\,Con}$$

or whether the total sum of the K_{ri}-factors' values of all power systems after changing of the K_{ri} value corresponds to the K_{ri} value for the block as a whole.

2.1.6.3 Information procedure Provider to the TSOs involved

The provider of PRIMARY CONTROL RESERVE has to inform the TSOs involved about the generation units providing PRIMARY CONTROL RESERVE.
For the purpose of monitoring the following kinds of information can be used:

- online measurement values
- archive data
- measured values from dedicated measurement equipment

2.2 Border – Crossing Secondary Control Reserve

2.2.1 Technical Realisation - Adaptation of the Load–Frequency Control

In the case of exchanging SECONDARY CONTROL RESERVES the load–frequency control (LFC) of both RESERVE RECEIVING TSO and RESERVE CONNECTING TSO is affected. The RESERVE TRANSITING TSO is not involved in this process with its own LFC, while its total scheduled interchange is not affected. Losses are supposed small enough to consider that import and export of SECONDARY CONTROL RESERVE through the area of the RESERVE TRANSITING TSO are balanced. Nevertheless the RESERVE TRANSITING TSO has to be involved in order to make proper reservations of transmission capacity on its own tie lines with these two TSOs. So, SECONDARY CONTROL RESERVE volume has to be communicated to the RESERVE TRANSITING TSO. The reserve can be exchanged with another TSO or with a GenCo in the other area.

Three different scenarios for technical realisations are considered:

1. Direct control of the generation unit by the RESERVE RECEIVING TSO
   a) Adaptation of the LFC by the measurement value from the generation unit
   b) Adaptation of the LFC by the requested power from the RESERVE RECEIVING TSO
2. Power request by the RESERVE RECEIVING TSO through the RESERVE CONNECTING TSO

2.2.1.1 Direct control of the generation unit by the RESERVE RECEIVING TSO

In the case of direct control of the generation unit the LFC of the RESERVE RECEIVING TSO sends its request for power directly to the generation unit. The LFCs of both the RESERVE RECEIVING and the RESERVE CONNECTING TSO have to be adapted in order to shift the generation unit "virtually" from the area of the RESERVE CONNECTING TSO to that of the RESERVE RECEIVING TSO. For this purpose the generation unit information (on – line measurement value of active power for scenario a) or request for power for scenario b)) has to be added to the LFC of the RESERVE RECEIVING TSO and subtracted from the LFC of the RESERVE CONNECTING TSO. The direct control of the generation unit by the RESERVE RECEIVING TSO fits to the contractual relation of border – crossing exchanging of SECONDARY CONTROL RESERVE from a GenCo.

<u>a) Adaptation of the LFC by the measurement value from the generation unit</u>

The on – line measurement value of active power is sent from the generation unit back to the LFCs of both the RESERVE RECEIVING and the RESERVE CONNECTING TSO. If the generation unit produces according to an underlying schedule in addition to providing for SECONDARY CONTROL RESERVE the schedule has to be subtracted from the measurement value accordingly. This introduces the concept of "virtual tie line" which connects the generation unit in the CONTROL AREA of the RESERVE CONNECTING TSO directly to the CONTROL AREA of the RESERVE RECEIVING TSO.

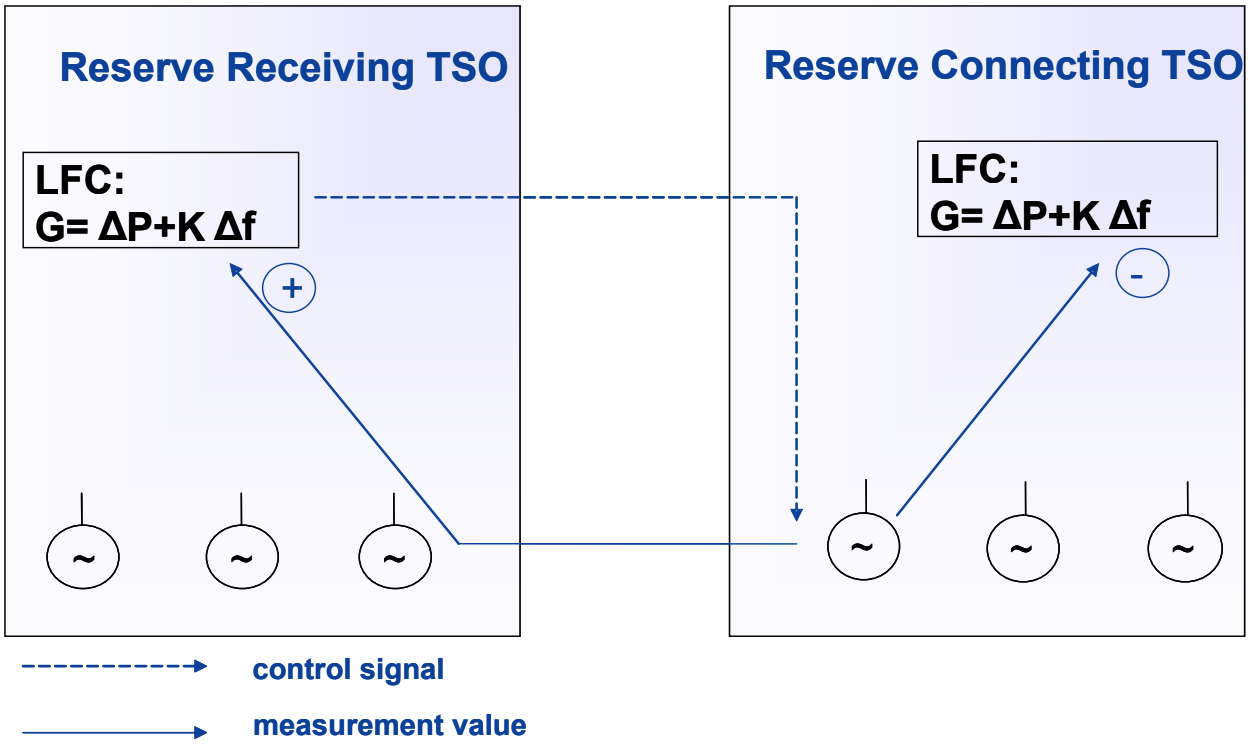

Fig. 6: Technical Realisation of SECONDARY CONTROL RESERVE across the Border: Scenario 1. a)

b) Adaptation of the LFC by the requested power from the RESERVE RECEIVING TSO

The request for power from the RESERVE RECEIVING TSO to the generation unit is sent to the RESERVE CONNECTING TSO and used for an adaptation of the LFCs of both the RESERVE RECEIVING and the RESERVE CONNECTING TSO.

2.2.1.2 Request for power by the RESERVE RECEIVING TSO through the RESERVE CONNECTING TSO

The principle of this solution is that the RESERVE RECEIVING TSO does not send its request for power directly to the generation unit but to the RESERVE CONNECTING TSO. The RESERVE CONNECTING TSO adjusts either the power of the plants which the RESERVE RECEIVING TSO has contracted with or the power plants the RESERVE CONNECTING TSO has contracted with itself. Thus this technical solution fits to the contractual relation of border – crossing exchanging of SECONDARY CONTROL RESERVE from a GenCo as well as from the RESERVE CONNECTING TSO. A full delegation of the responsibility of the SECONDARY CONTROL for this part of the reserve to the RESERVE CONNECTING TSO is supposed. The block diagram is presented in figure 8.

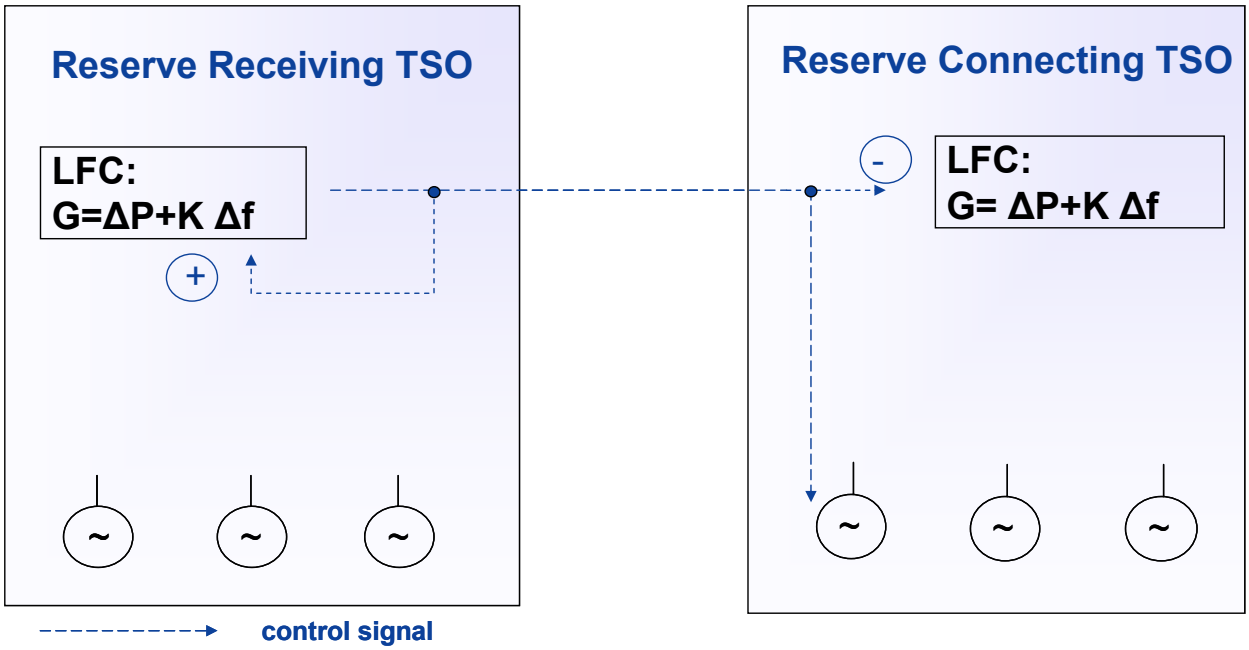

Fig. 7: Technical Realisation of SECONDARY CONTROL RESERVE across the Border: Scenario 1. b)

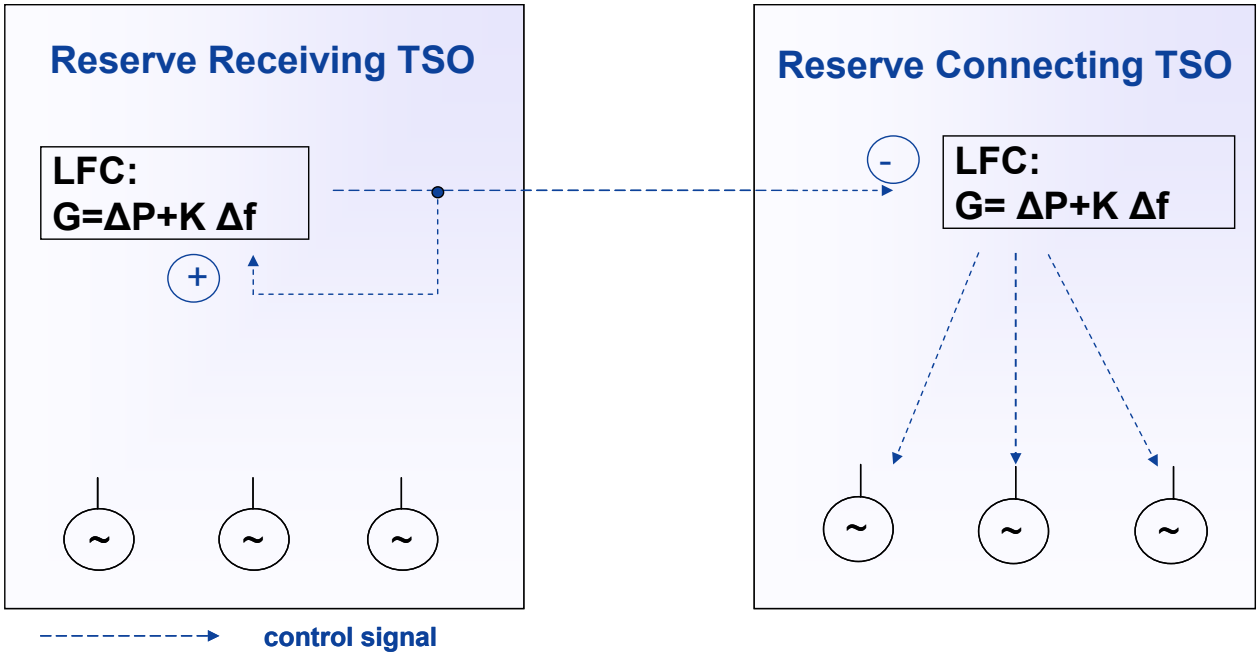

Fig. 8: Technical Realisation of SECONDARY CONTROL RESERVE across the Border: Scenario 2.

2.2.2 Conditions for a generation unit

The reasons why it is not possible for a single generation unit to contract SECONDARY CONTROL RESERVE with more than one RESERVE RECEIVING TSO at one time are as follow:

- possibilities of a generation unit for SECONDARY CONTROL are limited and cannot comply with requests from more than one TSO, in particular with respect to the power gradient

- it would be impossible to know for which TSO the power was generated as all SECONDARY CONTROL signals would be mixed up.

Nevertheless, a generation unit may contract with several TSOs but at any point in time each generation unit can be involved in only one TSO SECONDARY CONTROL. However a GenCo can contract with several TSO respecting the mentioned aspects.

In addition, a generation unit has to comply with technical conditions in accordance with, what is demanded by UCTE rules, in terms of response, and by the RESERVE RECEIVING TSO.

2.2.3 Responsibility of TSOs involved in the process

Any exchanging of SECONDARY CONTROL RESERVE has to be approved by all involved TSOs. The three TSOs - RESERVE CONNECTING TSO, RESERVE TRANSITING TSO and RESERVE RECEIVING TSO - endorse their responsibilities as soon as they accept to take part in the process of SECONDARY CONTROL RESERVES exchanging.

Once the RESERVE TRANSITING TSO has accepted its role in the exchange of SECONDARY CONTROL RESERVE between a RESERVE CONNECTING TSO and a RESERVE RECEIVING TSO, it warrants energy transport from the RESERVE CONNECTING TSO to the RESERVE RECEIVING TSO according to agreed rules. To this purpose it must reserve the necessary transmission capacity on its tie-lines to the RESERVE RECEIVING TSO, as well as to the RESERVE CONNECTING TSO.

Once the RESERVE CONNECTING TSO has accepted its role in the delivery of SECONDARY CONTROL RESERVE from a generation unit injecting in its CONTROL AREA to another RESERVE RECEIVING TSO, it must carefully monitor the generation unit. If for instance, the unit is unable to deliver what it is supposed to, the RESERVE CONNECTING TSO must give a warning to the RESERVE RECEIVING TSO in the best time, since the generation unit will not come up with the reserve power as expected. The RESERVE CONNECTING TSO warrants the energy transport from the generation unit to the border of the RESERVE RECEIVING TSO resp. the RESERVE TRANSITING TSO.

Once a contract is about to be signed between the RESERVE RECEIVING TSO and a GenCo, the provider of the reserve takes the responsibility for the correct activation of the contracted reserves. The RESERVE RECEIVING TSO takes over the responsibility to inform in due time both RESERVE CONNECTING TSO and RESERVE TRANSITING TSO of any change in reserve contracts: change of features as volume, units, duration or termination of contracting.

In case of an outage of a contracted unit for SECONDARY CONTROL RESERVE the impact on the LFC of the RESERVE RECEIVING TSO and RESERVE CONNECTING TSO varies depending on the scenario (see 2.2.1) for realisation:

- Scenario 1: Direct control of the generation unit by the RESERVE RECEIVING TSO: The RESERVE RECEIVING TSO has to take measures for corresponding imbalance correction
- 1 a) The imbalance occurs in the area of the RESERVE RECEIVING TSO (since the generation unit is connected through a fictitious line)
- 1 b) The imbalance occurs in the area of the RESERVE CONNECTING TSO
- Scenario 2: Power request by the RESERVE RECEIVING TSO through the RESERVE CONNECTING TSO: The RESERVE CONNECTING TSO has to take measures for corresponding imbalance correction; the imbalance occurs in the area of the RESERVE CONNECTING TSO

2.2.4 Monitoring

Monitoring the generation of the unit providing SECONDARY CONTROL RESERVE is essential when generation units for SECONDARY CONTROL of a TSO are not connected to the network of this same TSO. The RESERVE TRANSITING TSO is not concerned directly except if it needs to control the energy flow through its tie lines and check if they are consistent with the values agreed. An off–line monitoring seems to be sufficient for that purpose and has to be agreed individually.

For the RESERVE RECEIVING TSO, it is essential to check whether the SECONDARY CONTROL RESERVE requested by the LFC is delivered by the generation unit as expected. So it is necessary that the on – line measurement value of active power from the generation unit is provided to the RESERVE RECEIVING TSO through the RESERVE CONNECTING TSO, which gathers this data, taking into account the need for fast transmission and accurate and high resolution measurements.

2.2.5 General Procedure

The RESERVE RECEIVING TSO has concluded a contract with a GenCo offering a generation unit located in the CONTROL AREA of the RESERVE CONNECTING TSO or with the RESERVE CONNECTING TSO itself with the specification of:

– the contracted volume of power for SECONDARY CONTROL - P_{sx},

– the maximum variation of the contracted power expressed in MW/min

– time of transaction beginning - t_{beg}, time of transaction termination - t_{ter}.

In due time before the time t_{beg} both the RESERVE RECEIVING TSO and the RESERVE CONNECTING TSO set up and test the necessary information exchange between both their LFC and the generation unit – according to the scenario chosen for technical realisation (section 2.2.1)

At the time t_{beg} , both the RESERVE RECEIVING TSO and the RESERVE CONNECTING TSO activate the information exchange between its LFC and the generation unit. At the time t_{ter} , both the RESERVE RECEIVING TSO and the RESERVE CONNECTING TSO deactivate this information exchange again.

2.2.6 Information exchange

2.2.6.1 Information procedure between the TSOs and the generation unit

According to the technical realisation the results differ:

1. a) The RESERVE RECEIVING TSO sends the control signal to the generation unit. The on – line measurement value of active power is sent from the generation unit back to the LFC of both the RESERVE RECEIVING and the RESERVE CONNECTING TSO. If the generation unit produces according to an underlying schedule additional to SECONDARY CONTROL RESERVE the schedule has to be subtracted from the measurement value accordingly.

1. b) The RESERVE RECEIVING TSO sends the control signal to the generation unit and the LFC of the RESERVE CONNECTING TSO.

2. The RESERVE RECEIVING TSO sends the control signal to the LFC of the RESERVE CONNECTING TSO. The RESERVE CONNECTING TSO adjusts the power of the contracted generation units by sending a corresponding control signal.

2.2.6.2 Information procedure for the Provider of SECONDARY CONTROL RESERVE to the TSOs involved

The providing generation unit has to inform the TSOs involved about the units providing SECONDARY CONTROL RESERVE.

For the purpose of monitoring the following kinds of information can be used:
- on-line measurement values
- archive data
- Meter values

2.3 Border – Crossing Tertiary Control Reserve

2.3.1 Technical Realisation - Adaptation of the Load–Frequency Control

In the case of exchanging TERTIARY CONTROL RESERVE the load–frequency control (LFC) of both RESERVE RECEIVING TSO and RESERVE CONNECTING TSO is affected. The RESERVE TRANSITING TSO is not involved in this process with its own LFC, while its total scheduled interchange is not affected. Losses are supposed small enough to consider that import and export of TERTIARY CONTROL RESERVE through the area of the RESERVE TRANSITING TSO are balanced. Nevertheless RESERVE TRANSITING TSO has to be involved in order to make proper reservations on its own tie lines with these two TSOs. So, TERTIARY CONTROL RESERVE volume has to be communicated to it. The reserve can be exchanged with another TSO or with a GenCo in the other area.

The TERTIARY CONTROL RESERVE has to be delivered within the time frame of the exchange schedules of ¼ h on activation of the RESERVE RECEIVING TSO. The LFC of both the RESERVE RECEIVING and the RESERVE CONNECTING TSO have to be adapted in order to shift the generation unit "virtually" from the area of the RESERVE CONNECTING TSO to that of the RESERVE RECEIVING TSO. For this purpose the TERTIARY CONTROL RESERVE information has to be added to the LFC of the RESERVE RECEIVING TSO and subtracted from the LFC of the RESERVE CONNECTING TSO. Three scenarios are considered with respect to the information used for the adaptation of LFC :

Three different scenarios for technical realisations are considered:

1. Direct activation of the generation unit by the RESERVE RECEIVING TSO

a) Adaptation of the LFC by the measurement value from the generation unit

b) Adaptation of the LFC by the exchange schedule from the RESERVE RECEIVING TSO

2. Power request by the RESERVE RECEIVING TSO through the RESERVE CONNECTING TSO

2.3.1.1 Direct activation of the generation unit by the RESERVE RECEIVING TSO

The direct activation of the generation unit fits to the contractual relation of border – crossing exchanging of TERTIARY CONTROL RESERVE from a GenCo.

<u>a) Adaptation of the LFC by the measurement value from the generation unit</u>

The on – line measurement value of active power is sent from the generation unit back to the LFC of both the RESERVE RECEIVING and the RESERVE CONNECTING TSO. If the generation unit produces according to an underlying schedule additional to TERTIARY CONTROL RESERVE the schedule has to be subtracted from the measurement value accordingly. For the technical realisation a link must be set up from each generation unit which the RESERVE RECEIVING TSO has contracted for TERTIARY CONTROL RESERVE and the LFC of both the RESERVE RECEIVING and RESERVE CONNECTING TSO.

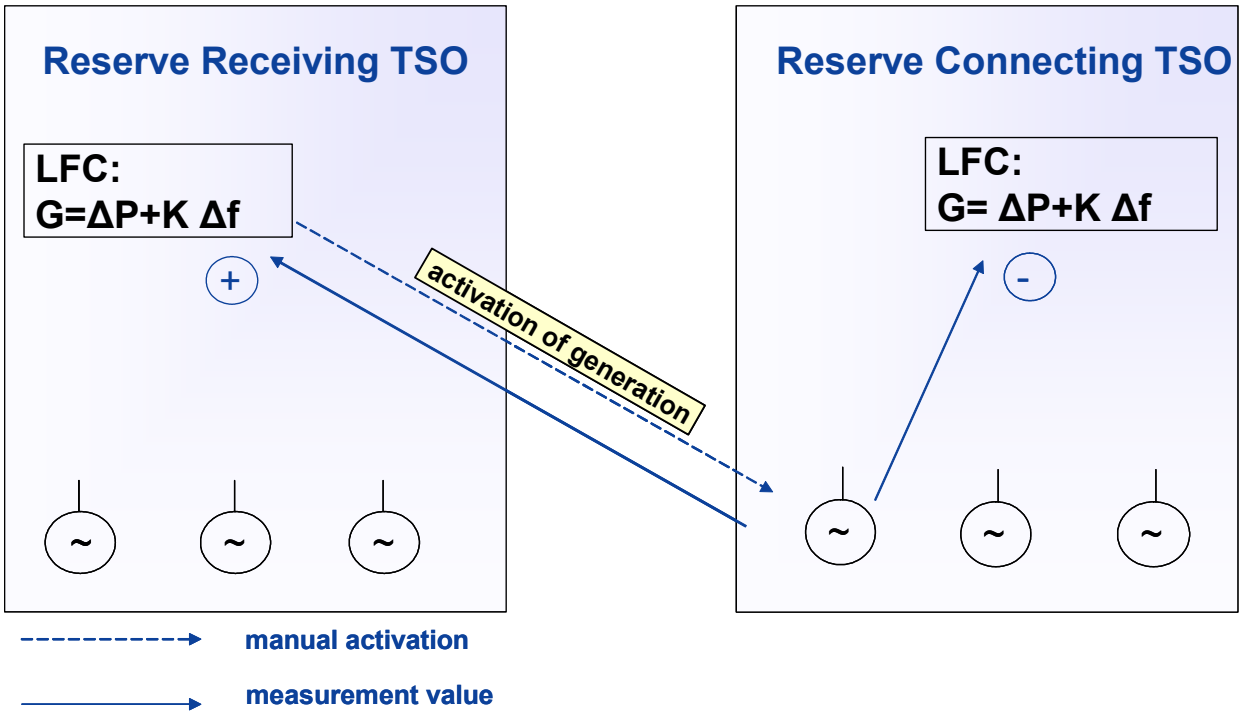

Fig. 9: Technical Realisation of TERTIARY CONTROL RESERVE across the Border: Scenario 1 a)

b) Adaptation of the LFC by the exchange schedule from the RESERVE RECEIVING TSO

The exchange schedule related to TERTIARY CONTROL RESERVE agreed between the RESERVE RECEIVING TSO, the RESERVE CONNECTING TSO and the generation unit is used for an adaptation of the LFC of both the RESERVE RECEIVING and the RESERVE CONNECTING TSO.

2.3.1.2 Power request by the RESERVE RECEIVING TSO through the RESERVE CONNECTING TSO

The RESERVE CONNECTING TSO provides TERTIARY CONTROL RESERVE to the RESERVE RECEIVING TSO. In this case the RESERVE RECEIVING TSO has to agree with the RESERVE CONNECTING TSO on an exchange schedule, which is used for an adaptation of the LFC of both the RESERVE RECEIVING and the RESERVE CONNECTING TSO. The RESERVE CONNECTING TSO activates the generation from either a set of units contracted by the RESERVE RECEIVING TSO or from a set of units contracted by the RESERVE CONNECTING TSO itself. Thus this technical solution fits to contractual relation of border – crossing exchanging of TERTIARY CONTROL RESERVES with a GenCo as well as with another TSO. This scenario is already used in certain cases of exchange of reserves between TSOs.

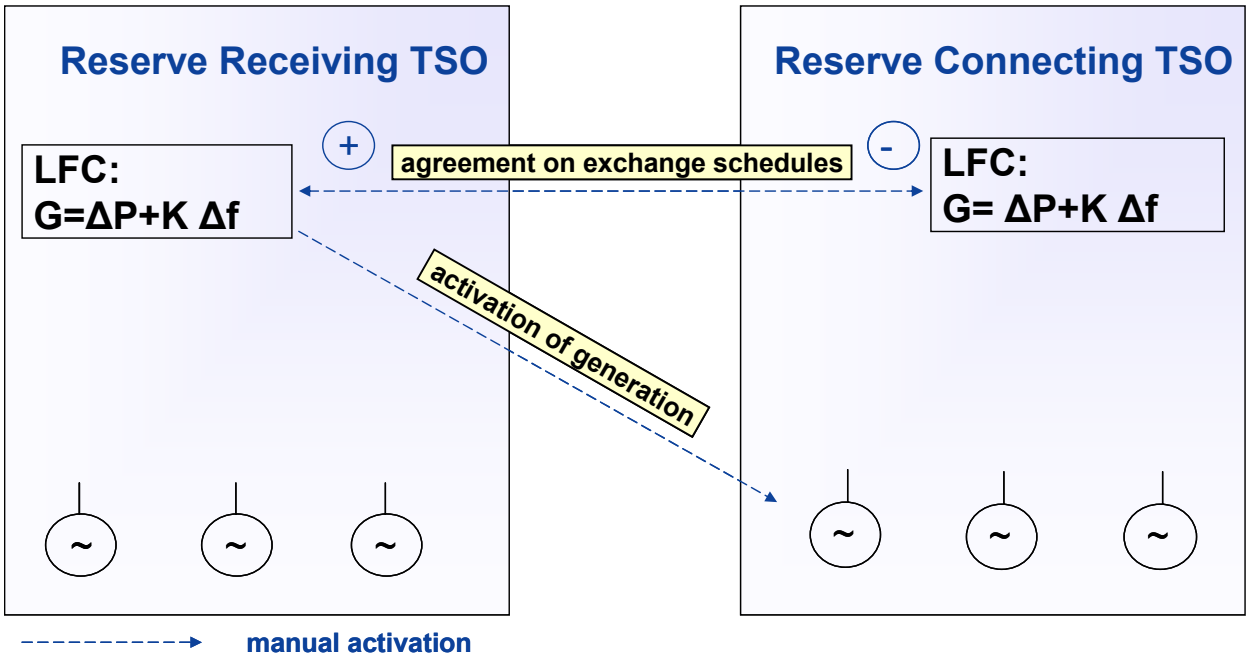

Fig. 10: Technical Realisation of TERTIARY CONTROL RESERVE across the Border: Scenario 1 b)

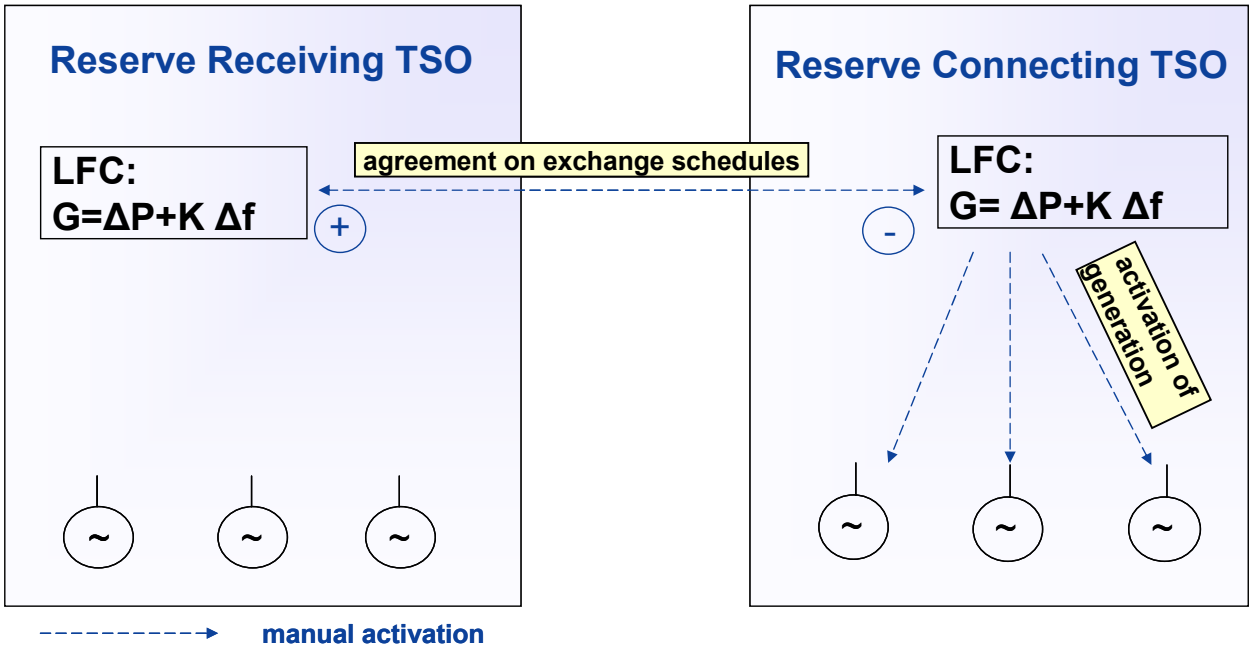

Fig. 11: Technical Realisation of TERTIARY CONTROL RESERVE across the Border: Scenario 2

2.3.2 Conditions for a generation unit

A generation unit has to comply with technical conditions in accordance with what is demanded by UCTE rules, in terms of response, and by the RESERVE RECEIVING TSO.

2.3.3 Responsibility of TSOs involved in the process

Any exchanging of TERTIARY CONTROL RESERVE has to be approved by all involved TSOs. The three TSOs - RESERVE CONNECTING TSO, RESERVE TRANSITING TSO and RESERVE RECEIVING TSO - endorse their responsibilities as soon as they accept to take part in the process of TERTIARY CONTROL RESERVE exchanging.

Once the RESERVE TRANSITING TSO has accepted its role in the exchange of TERTIARY CONTROL RESERVE between a RESERVE CONNECTING TSO and a RESERVE RECEIVING TSO, it warrants energy transport from the RESERVE CONNECTING TSO to the RESERVE RECEIVING TSO according to agreed rules. To this purpose it must reserve the necessary transmission capacity on its tie-lines to the RESERVE RECEIVING TSO, as well as to the RESERVE CONNECTING TSO.

Once the RESERVE CONNECTING TSO has accepted its role in the delivery of TERTIARY CONTROL RESERVE from a generation unit injecting in its CONTROL AREA to another RESERVE RECEIVING TSO, it must carefully monitor the generation unit. If for instance, the one or more units are unable to deliver what they are supposed to, the RESERVE CONNECTING TSO must give a warning to the RESERVE RECEIVING TSO in the best time, since the generation unit will not come up with the reserve power as expected. The RESERVE CONNECTING TSO warrants the energy transport from the generation unit to the border of the RESERVE RECEIVING TSO resp. the RESERVE TRANSITING TSO.

Once a contract is about to be signed between the RESERVE RECEIVING TSO and a GenCo, the provider of the reserve takes the responsibility for the correct activation of the contracted reserves. The RESERVE RECEIVING TSO takes over the responsibility to inform in due time both RESERVE CONNECTING TSO and RESERVE TRANSITING TSO of any change in reserve contracts: change of features as volume, units, duration or termination of contracting.

In case of an outage of a contracted unit for TERTIARY CONTROL RESERVE the impact on the LFC of the RESERVE RECEIVING TSO and RESERVE CONNECTING TSO varies depending on the scenario (see 2.3.1) for realisation:

- Scenario 1: Direct activation of the generation unit by the RESERVE RECEIVING TSO: The RESERVE RECEIVING TSO has to take measures for corresponding imbalance correction
- 1 a) The imbalance occurs in the area of the RESERVE RECEIVING TSO (since the generation unit is connected through a fictitious line)
- 1 b) The imbalance occurs in the area of the RESERVE CONNECTING TSO

Scenario 2: Power request by the RESERVE RECEIVING TSO through the RESERVE CONNECTING TSO: The RESERVE CONNECTING TSO has to take measures for corresponding imbalance correction; the imbalance occurs in the area of the RESERVE CONNECTING TSO

2.3.4 Monitoring

Monitoring is essential when a generation unit for TERTIARY CONTROL of a TSO is not connected to the network of this TSO. The RESERVE TRANSITING TSO is not concerned directly except if it wants to control the energy flow through its tie lines and check if they are consistent with the values agreed. An off –line monitoring seems to be sufficient for that purpose and has to be agreed individually.

For the RESERVE RECEIVING TSO, it is essential to check whether the TERTIARY CONTROL RESERVE requested by the LFC is delivered by the generation unit. One possible means is the provision of the on – line measurement value of active power from the generation unit to the RESERVE RECEIVING TSO, possibly through the RESERVE CONNECTING TSO, which might gather this data.

2.3.5 General Procedure

The RESERVE RECEIVING TSO has concluded a contract with the generation unit, or a generating company located in the CONTROL AREA of the RESERVE CONNECTING TSO or with the RESERVE CONNECTING TSO with the specification of:

– the contracted volume of power for TERTIARY CONTROL - P_{Tx},

– time of transaction beginning - t_{beg}, (which includes the time needed to activate the reserve) and time of transaction termination - t_{ter}.

In due time before the time t_{beg} both the RESERVE RECEIVING TSO and the RESERVE CONNECTING TSO set up the necessary information exchange between its LFC and the generation unit – according to the scenario chosen for technical realisation (section 2.1)

At the time t_{beg} , both the RESERVE RECEIVING TSO and the RESERVE CONNECTING TSO activate the information exchange between its LFC and the generation unit. At the time t_{ter} , both the RESERVE RECEIVING TSO and the RESERVE CONNECTING TSO deactivate this information exchange again.

2.3.6 Information exchange

2.3.6.1 Information procedure between the TSOs and the generation unit

According to the technical realisation the results differ:

1. a) The RESERVE RECEIVING TSO activates the generation unit by a schedule and agrees the exchange schedule with the RESERVE CONNECTING TSO. In addition the on – line measurement value of active power is sent from the generation unit back to the LFC of both the RESERVE RECEIVING and the RESERVE CONNECTING TSO. If the generation unit produces according to an underlying schedule additional to TERTIARY CONTROL RESERVE the schedule has to be subtracted from the measurement value accordingly.

1. b) The RESERVE RECEIVING TSO activates the generation unit by a schedule and agrees the exchange schedule with the RESERVE CONNECTING TSO.

2. The RESERVE RECEIVING TSO agrees the exchange schedule with the RESERVE CONNECTING TSO. The RESERVE CONNECTING TSO activates contracted generation units by a schedule.

2.3.6.2 Information procedure Providing Generation unit to TSOs involved

The providing generation unit has to inform the TSOs involved about the units providing TERTIARY CONTROL RESERVE.

For the purpose of monitoring the following kinds of information can be used:
- online measurement values
- archive data
- Meter values

3. Current State

The results of the analysis of existing rules and recommendations collected in the UCTE document "Compatibility of international trading of power for PRIMARY, SECONDARY and TERTIARY CONTROL with the technical rules of the UCTE" shows certain discrepancies between free exchanging of different types of power reserves by TSOs and UCTE technical rules.

According to existing rules, the power balancing is performed by the Transmission System Operators for their CONTROL AREAS in three steps within the UCTE synchronous zone:

- Decentralised automatic frequency control (PRIMARY CONTROL)
- Centralised automatic load-frequency control (SECONDARY CONTROL)
- Centralised activation of additional short-term reserve (TERTIARY CONTROL)

The technical rules of the UCTE currently in force, which are deduced from physical relations to operate reliably a synchronous interconnected system based on the principle of joint action, allow exchanging of power for control purposes, in some cases even across the borders of the CONTROL AREA.

3.1 Primary Control Reserve

Exchanging of reserves for PRIMARY CONTROL is only possible inside a CONTROL BLOCK.

Justification and conditions: The shares of PRIMARY CONTROL RESERVE are calculated for countries; for certain cases they relate to CONTROL AREAS while in other cases they may relate to CONTROL BLOCKs. The assumption is that shifting and exchanging of PRIMARY CONTROL RESERVE is possible inside one CONTROL BLOCK and inside the combination of areas creating one block. In order to guarantee, that the principle of joint action is ensured continuously, the resulting network power frequency characteristic λ_{oi} of all CONTROL AREAS and BLOCKS should always be above the minimal value approved yearly by the UCTE.
The responsible TSOs have to take care of a homogeneous distribution, in order to ensure the transmission of this reserve power at all times without overloading transmission lines. The allocation of the PRIMARY CONTROL RESERVE of each CONTROL AREA to a large number of units equipped with primary governors is an essential measure to counteract major disruptions and to re-establish normal operating conditions in the case of system restoration.
Furthermore the responsible TSOs have to supervise the contracted power. In the case of contracts across the borders of the CONTROL AREA within a CONTROL BLOCK, the TSOs of the CONTROL AREAS concerned and the TSO which is responsible for the CONTROL BLOCK must agree and adapt the frequency bias setting K_{ri} of their Load-Frequency Controller accordingly.

3.2 Secondary Control Reserve

Exchanging of reserves for SECONDARY CONTROL across the borders of a CONTROL AREA is not defined in the UCTE rules. Because of the time needed for schedule updates it can be concluded that this exchanging is not allowed.

Justification: Based on the principle of CONTROL AREAS and SECONDARY CONTROL, the secondary frequency controller changes power production in a closed loop manner resulting in an immediate physical effect (correction) on the power interchange of the individual CONTROL AREA to reduce the overall control deviation Gi. Due to the fact that on-line updating of interchange schedules is not allowed, it can be concluded that the generating units injecting the SECONDARY CONTROL RESERVE have to be operated inside the CONTROL AREA or on the boundary using radial operation into the area.

The activation of SECONDARY CONTROL RESERVE should be well distributed within the CONTROL AREA of the responsible Transmission System Operator. This is decisive in the case of major disruptions in interconnected operation or in the case of system restoration. In the case of interruptions of the tie-line measurements and in the worst case of isolated operation of a system it is necessary to switch the secondary frequency control to a pure frequency control mode. But this works properly only if K_{ri} (which depends on the amount of PRIMARY CONTROL RESERVE) and SECONDARY CONTROL RESERVE correspond to the system size.

3.3 Tertiary Control Reserve

Exchanging reserve for TERTIARY CONTROL across the borders of CONTROL AREAS is possible inside the whole synchronous interconnected system.

Conditions: Activation of power from outside the CONTROL AREA or the CONTROL BLOCK is restricted with respect to the agreed time limits and should respect the timeframe of schedules. In these cases activation has to be performed in changing simultaneously the settings of the energy exchange programs between both CONTROL AREAS / BLOCKS concerned. Apart from exceptional cases (manual corrections of exchange schedules i.e. in case of generation unit outages), the mentioned settings of energy exchange programs cannot be changed within the accounting period (MTFS). In addition it has to be ensured that for all time periods concerned sufficient transmission capacity is available.