Proposal for categorization of Significant Users

First step of the iterative process

Experts Group - Implementation NCs (session 3)

Jonathan Sprooten

Power System Operation and Security, Elia

25/02/2016

Agenda of this 3rd session

- Clarification of Generating units and storage systems
- Description of Power Generating Units and difference with existing “unité de production/productie eenheid”
- Validation of coordination on the need for synthetic inertia
- Enhanced justification for B-C and C-D limits
- Formulate a working proposal taking into account arguments from stakeholders

Clarification of Generating units and storage systems

- ***Extract from the NC RfG***

"This Regulation shall not apply to:

a) […]

b) power generating modules that were installed to provide back-up power and operate in parallel with the system for less than five minutes per calendar month while the system is in normal system state. […]

c) power generating modules that do not have a permanent connection point and are used by the system operators to temporarily provide power when normal system capacity is partly or completely unavailable;

d) storage devices except for pump-storage power generating modules in accordance with Article 6(2).

- ***Therefore, the following are not covered by the NC:***

Backup-up generators

However, for local issues they have to follow some basic rules (protection, …power quality, …)

Backup supplies of DSO and TSO during maintenance work
Trains during breaking phases,
Electric Vehicle while connected,
….

Batteries, Electric Vehicle while connected, …

Power Generating Module and difference with existing “unité de production/productie eenheid” – status

From Federal Technical Reglement:

41° « unité de production » : une unité physique comprenant un générateur qui produit de l'électricité;

42° « ensemble de production » : ensemble des unités de production ayant un ou plusieurs processus techniques de fonctionnement commun dont l'indisponibilité conduit à l'indisponibilité partielle ou totale des unités de production concernées;

43° « unité de production locale » : unité de production dont le point d'injection est identique au point de prélèvement d'une ou plusieurs charges;

41° « productie-eenheid » : een fysieke eenheid die een generator omvat die elektriciteit produceert;

42° « productiegeheel » : het geheel van productie-eenheden die één of meerdere technische processen gemeenschappelijk hebben en waarvan de onbeschikbaarheid leidt tot de onbeschikbaarheid van de gedeeltelijke of gehele betrokken productie-eenheden;

43° « lokale productie-eenheid » : productie-eenheid met injectiepunt identiek aan het afnamepunt van een of meerdere belastingen;

From EU NC RfG

- ‘synchronous power generating module’ means **an indivisible set of installations** which can generate electrical energy such that the frequency of the generated voltage, the generator speed and the frequency of network voltage are in a constant ratio and thus in synchronism;
- ‘power park module’ or ‘PPM’ means a unit or ensemble of units generating electricity, which is either non-synchronously connected to the network or connected through power electronics, and that also **has a single connection point to** a transmission system, distribution system including closed distribution system or HVDC system;

Power Generating Units and difference with existing “unité de production/productie eenheid” – status

From Federal Technical Reglement

28° « point de raccordement » : la localisation physique et le niveau de tension du point où le raccordement est connecté au réseau et qui sépare la partie des installations de raccordement du réseau de transport de la partie des installations de raccordement dont la déconnexion du réseau de transport n'a d'effets que sur l'utilisateur du réseau raccordé à ce point;

28° « aansluitingspunt » : de fysieke plaats en het spanningsniveau van het punt waar de aansluiting is verbonden met het net en die het deel van de aansluitingsinstallaties van het transmissienet scheidt van het deel van de aansluitingsinstallaties waarvan de uitschakeling van het transmissienet slechts gevolgen heeft voor de netgebruiker aangesloten op dat punt ;

29° « point d'interface » : la localisation physique et le niveau de tension du point où l'installation d'un utilisateur du réseau est connectée aux installations de raccordement, ce point se situant nécessairement entre l'extrémité de la travée de raccordement au départ du réseau d'une part et, dans le cas d'utilisateurs raccordés au réseau via un jeu de barres, l'extrémité de la travée de raccordement reliée à l'installation de l'utilisateur du réseau, côté utilisateur, d'autre part;

29° « punt van interface » : de fysieke plaats en het spanningsniveau van het punt waar de installatie van een netgebruiker verbonden is met de aansluitingsinstallaties en die zich noodzakelijk bevinden tussen het uiteinde van het aansluitingsveld vanaf het net enerzijds en, in geval van netgebruikers aangesloten tot het net via een railstel, het uiteinde van het aansluitingsveld verbonden tot de uitrusting van de netgebruiker, aan de zijde van de netgebruiker anderzijds;

From EU NC RfG

- ‘connection point’ means **the interface** at which the power generating module, demand facility, distribution system or HVDC system is connected **to a transmission system, offshore network, distribution system, including closed distribution systems, or HVDC system, as identified in the connection agreement**;

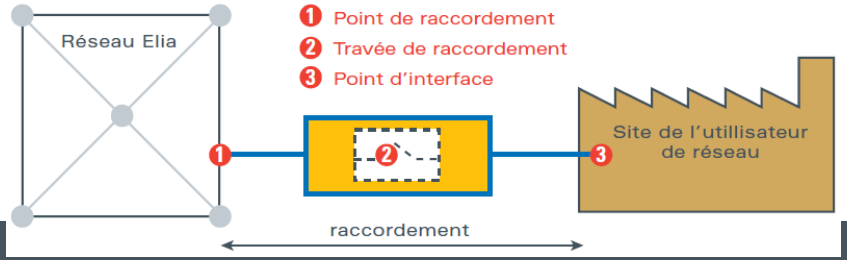

Additional extracts from the NC RfG

- Definition (19) - 'offshore power park module'
  - 'offshore power park module' means a power park module located offshore **with an offshore connection point**;

- Preamble (9)
  - The significance of power generating modules should be based on their size and their effect on the overall system. Synchronous machines should be classed on the machine size and include **all the components of a generating facility that normally run indivisibly**, such as separate alternators driven by the separate gas and steam turbines of a single combined cycle gas turbine installation.
  - **For a facility including several such combined cycle gas turbine installations, each should be assessed on its size**, and not on the whole capacity of the facility.
  - **Power park modules**, where they are collected together to form an economic unit and **where they have a single connection point** should be assessed on their aggregated capacity.

What is a Power Generating Module? Concept 1: Concept of “indivisible set of installations” for SPGM

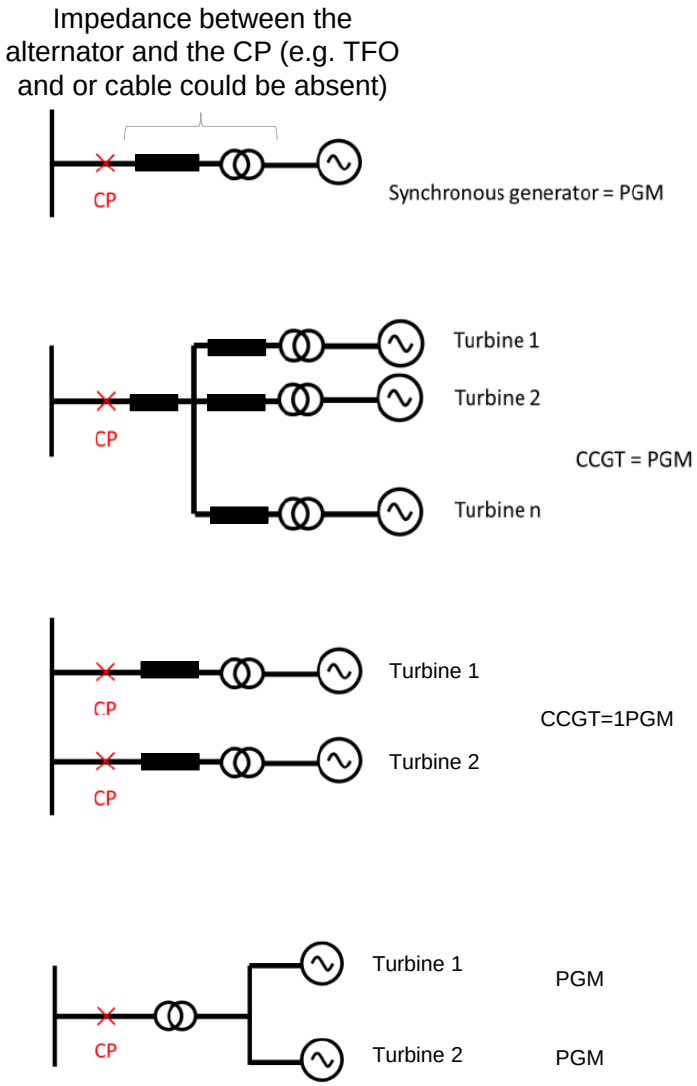

A single-shaft CCGT(only one generator with several turbines on the same shaft) , an hydro unit, a diesel, … is a single synchronous generating unit => 1PGM

Ensemble of synchronous units that cannot be operated independently from each other (e. g. multi-shaft CCGT where the steam turbine (ST) cannot be operated standalone, but together with at least one gas turbine (GT). => 1PGM

The case of a CCGT where the ST has a dedicated connection point. Obviously the ST itself will not be able to meet all relevant RfG requirements. In this case the concept of connection point should be understood in a flexible manner (the 2 physical points are the connection point)

Ensemble of synchronous units that are controlled separately even if have a shared transformer => 2 PGMs
=> Common equipment do not prohibit from operating one unit without the other.

What is a Power Generating Module? Concept 2: Concept of “ensemble of units” and “single connection point” for PPM

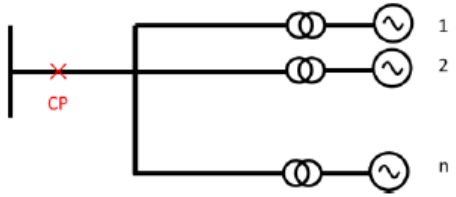

Single PPM in a wind farm operated as one combined unit

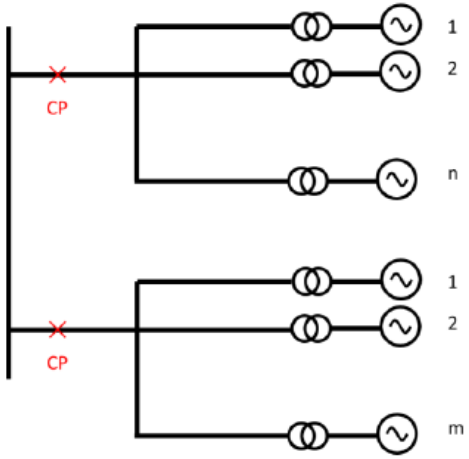

Two PPMs as they are operated separately or in a combined manner but have 2 connection points
⇒ 2 PPMs

What is a Power Generating Module? Concept 3: Connection Point “as identified in the connection agreement”

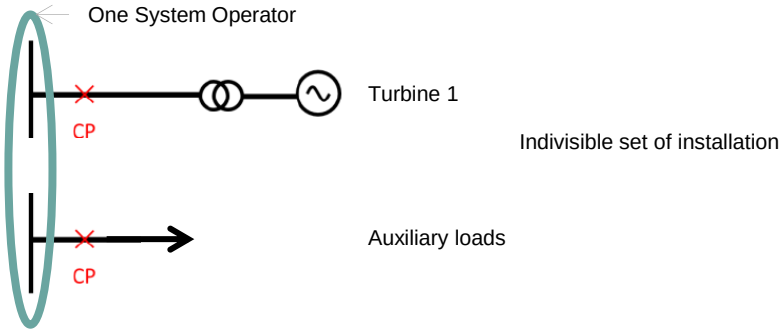

The case of a power generating module with the auxiliary power (needed for the operation of the module) connected at another location in the grid operated by one SO. In this case the concept of connection point should be understood in a flexible manner (the 2 physical points are the connection point)

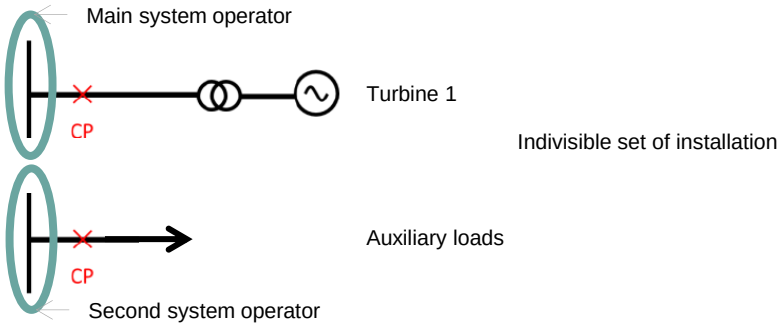

The case of a power generating module with the auxiliary power (needed for the operation of the module) connected at another location in the grid which is operated by another SO than the grid at the generating site.

The concept of connection point should be understood in a flexible manner (the 2 physical points are the connection point) and the connection process (EON, ION, FON) should be dealt in coordination between the system operation. Coordinating role should be in hand of the system operator where the generating part is connected.

Note that, if relevant, this concept can be generalized easily for PPM

What is a Power Generating Module? Concept 4: Load and Local Generation in CDS or Not

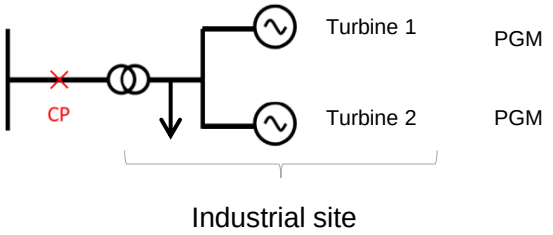

2 single (local) synchronous generating unit => 2 PGMs connected at the Transmission network or Distribution Network Connection point of the industrial site.

Each PGMs can meet the grid code requirement event in the absence of the other PGM and in any operating point of the industrial site. Process relation (e.g. cogeneration for the generation of electricity and used in the industrial site) are to be taken into account in defining the operating points.

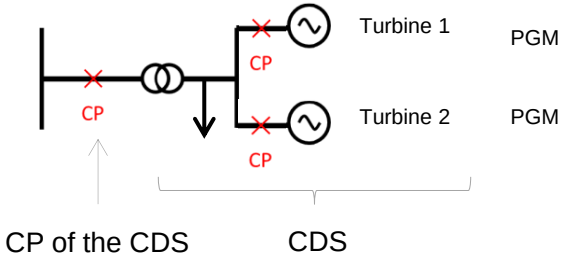

2 single (local) synchronous generating unit => 2 PGMs connected at the Connection Point within the (Closed) Distribution System.
The (Closed) Distribution System is the system operator and is responsible to verify the compliance of the PGMs

Note that, if relevant, this concept can be generalized easily for PPM

What is a Power Generating Module? Concept 5: Shared Connections or Not

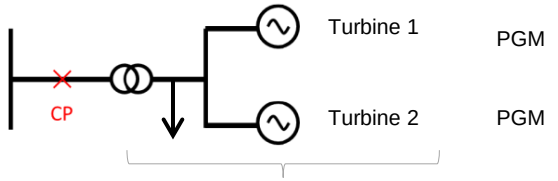

2 single (local) synchronous generating unit
⇒ 2 PGMs
⇒ One connection contract with the SO
Any ancillary service contracts are defined at the connection point and are to be agreed with the owner of the holder of the connection contract.

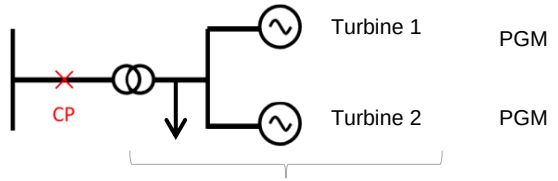

2 single (local) synchronous generating unit having a shared-connection
⇒ 2 PGMs
⇒ One connection contract with the SO but several parties known in the contract
Management of ancillary service contracts are defined in the shared-connection contract

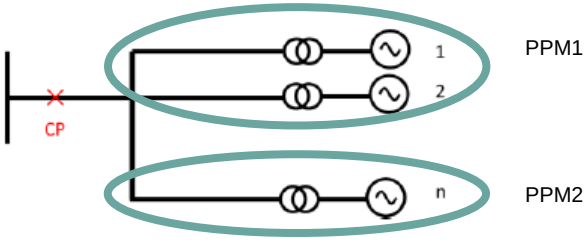

Two PPMs in a wind farm operated separately, having a shared-connection and that can meet the grid code requirement even in the absence of the other wind farm.

Note that, if relevant, this concept can be generalized easily for PPM or SPGM

What is a Power Generating Module? Concept 6: Detail Study and Project Phasing

- A Detail Study with 2 phases

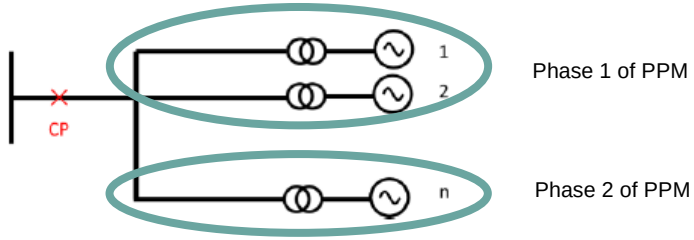

Single PPM in a wind farm operated as one combined unit after the 2 phases are finalized

- A Detail Study with 1 phase + A new Detail Study requested later on

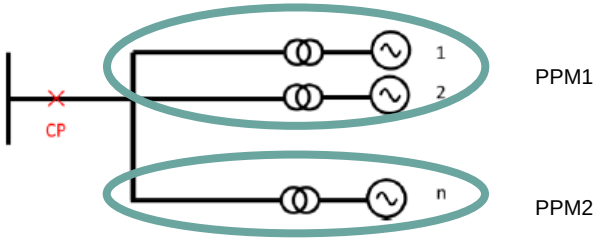

Two PPMs in a wind farm operated separately

- A Detail Study with 1 phase + A new Detail Study requested later on to increase the power of the PPM capacity

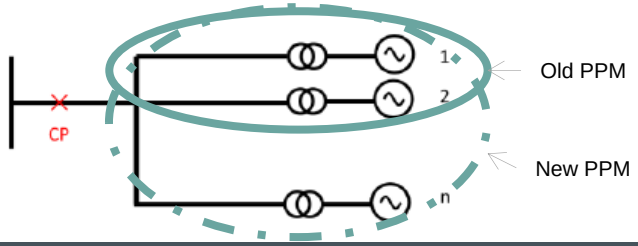

Single PPM in a wind farm operated as one combined unit

Validation of coordination on the need for synthetic inertia (1/2)

- 'Synthetic Inertia' means the facility provided by a power park module or HVDC system to emulate the effect of inertia of a synchronous power generating module to a prescribed level of performance. Hence, the imitated response should be function of rate of change of frequency (df/dt) with lowest time delay (limited to technical constraints).

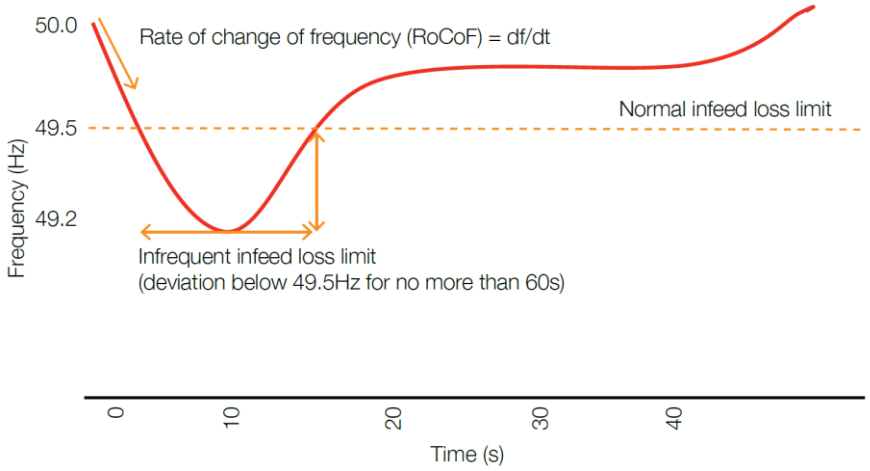

Goals:

- Limit the system initial rate of change of frequency (RoCoF) – df/dt
- Limit the lower/higher nadir of the frequency to avoid demand/generation disconnection.

- Harmonisation: ENTSO-e Continental Europe is conducting a study on "*Frequency stability evaluation criteria for the synchronous zone of Continental Europe – Requirements and impacting factors*"

Validation of coordination on the need for synthetic inertia (2/2)

- Within the last 15 years the continental European power system has experienced three serious disturbances where frequency gradients in a range between 100 mHz/s up to 1 Hz/s have been recorded.
- Considering the different realistic situations, scenarios and considering reference incident, draft conclusions are that the system shall be designed for remaining frequency stable after a system split with an imbalance up to 40 % of the load. This seems to be needed when marked driven transits will evolve further.
- Based on this, ENSTO-e is currently working on the definition of
  - Maximum RoCoF that can be withstood by the grid users.
  - Parameters of the LFSM-O characteristic (droop, steepness, measurement delay)
  - And then on the expected behaviour of non-synchronous generating facilities (i.e. synthetic inertia)

Enhanced justification for limit B-C

Non-exhaustive list of existing requirements for units connected to the Elia local-transmission grid or for “regulating units” (25MW)

Art. 71	Reactive power capability in a range of voltage (also TRPVE Artikel III.3.2.9)
Art. 72	Need for Under and Over-Excitation Limiter (OEL & UEL) (see TRPVE Artikel III.3.2.10)
Art. 73	Voltage droop at point of connection (AVR) (see RTF 73, TRPVE Artikel III.3.2.11 & 12)
Art. 75	Power System Stabilizer (PSS) (also TRPVE Artikel III.3.2.14)
Art. 114	Compliance testing (see “Conformity of the Belgian grid to the technical regulations - Stability study”) also TRPVE Artikel III.4.3.5)
Art. 115	Information on technical data (Annexe3) (also TRPVE Artikel III.2.3.2)

These requirements can be found in the NC RfG for Type C units and some for type D units (AVR, PSS, OEL, UEL).

These requirements are of major importance to support today’s operation and voltage control is expected to be even more important in the future in light of

- reduced number of generating units of type C & D
- increasing load-flow variability

Current requirements in BE and NC RfG

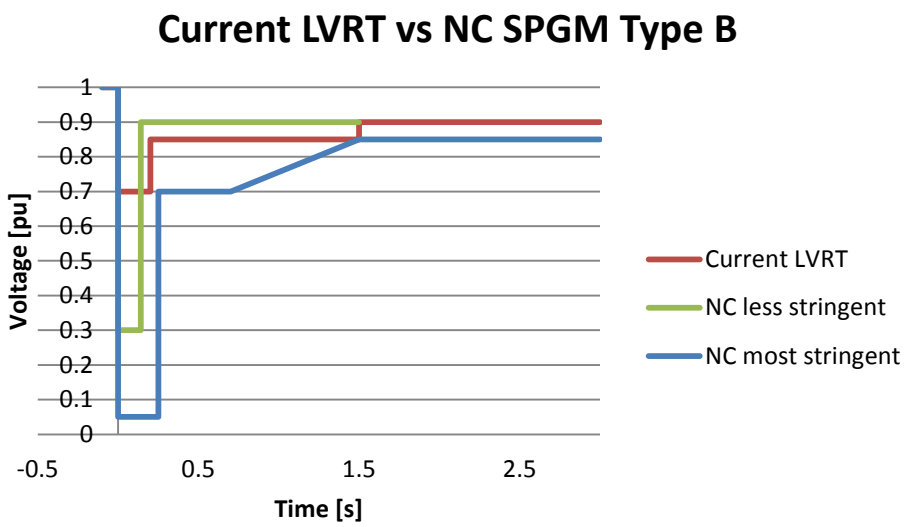

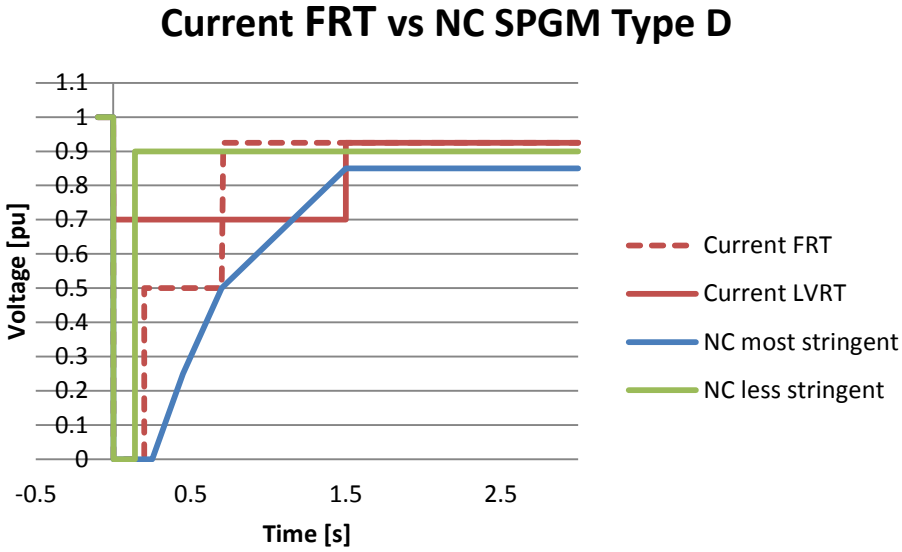

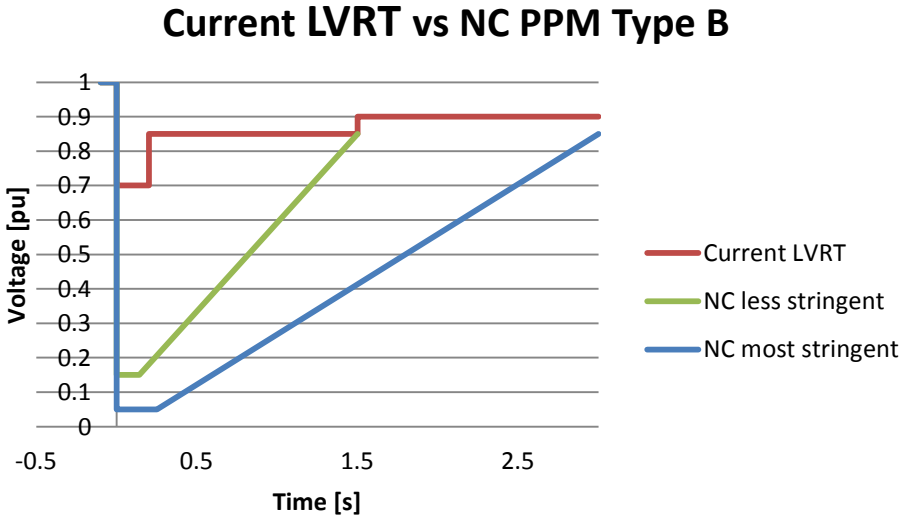

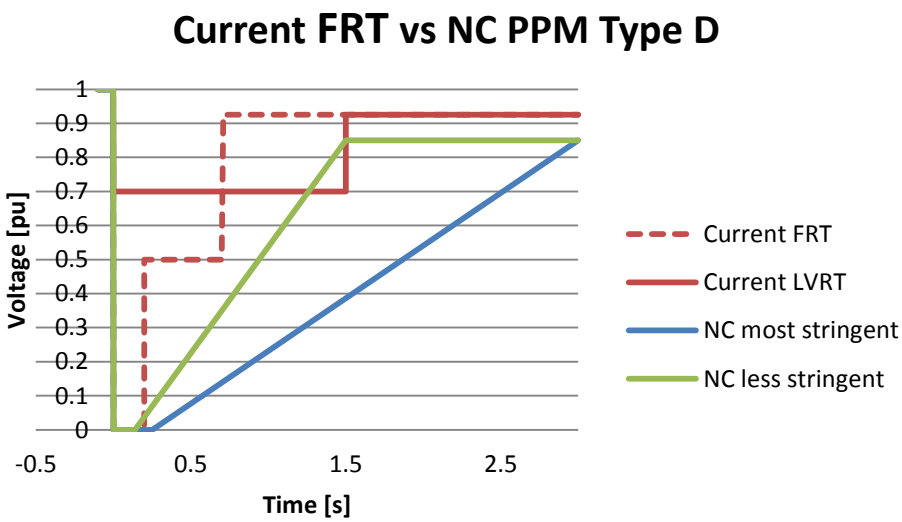

Enhanced justification for 75MW and 25MW if above 110kV - proposal for limit C-D

- Example of Fault-Ride-Through response of units of size 10-40MW connected to a realistic grid in case of realistic faults (cleared in 200ms through element tripping)

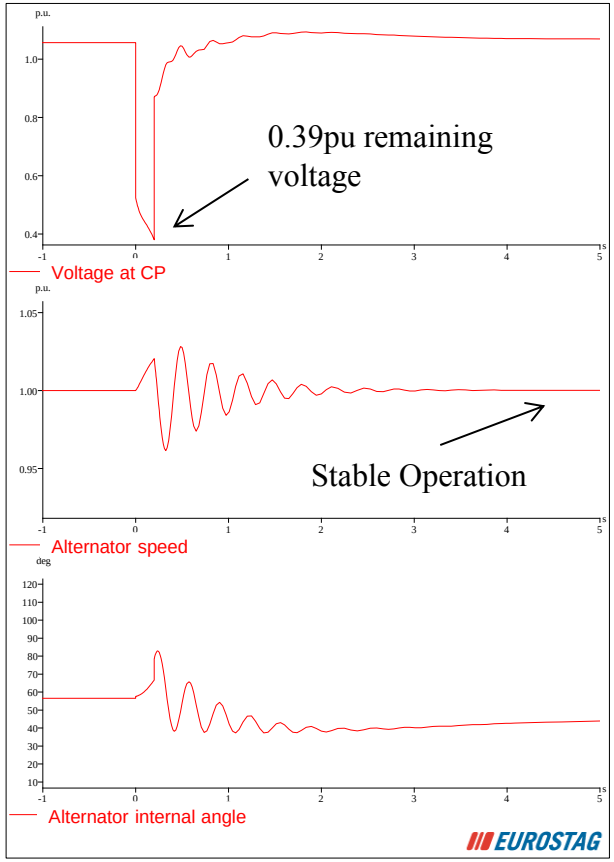

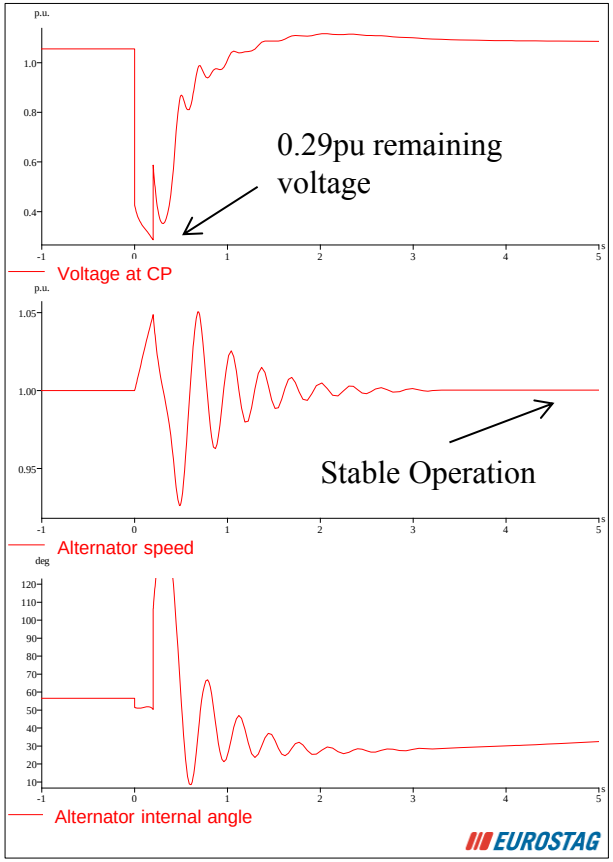

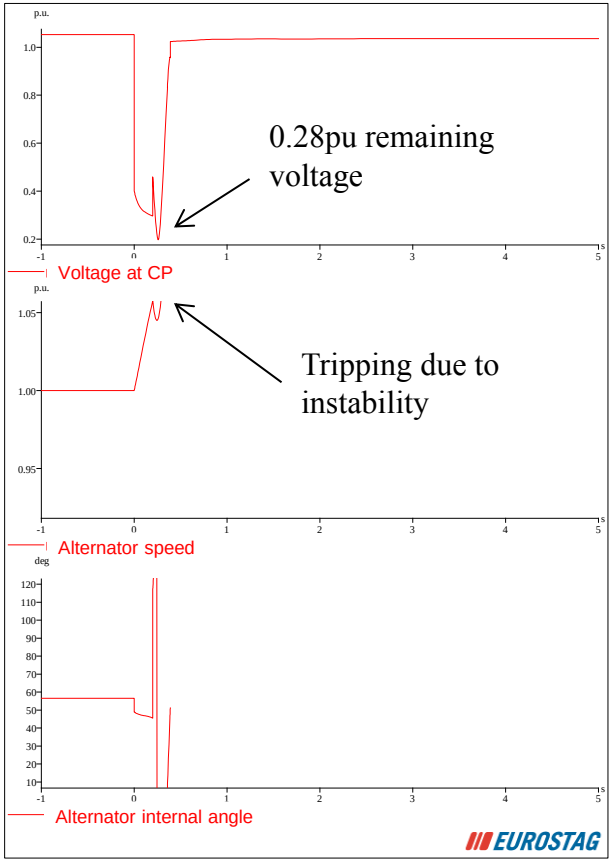

Working proposal taking into account arguments from stakeholders (1/6)

- **General Aspects**
  - The aim of the NC requirements is to, cost-effectively, be able to maintain, preserve and restore the security of the power systems with a high level of reliability and quality in order to facilitate the functioning of the EU-internal electricity market now and in the future. This doesn't mean minimizing the cost for each individual user but to source the needed functionalities at minimum qualitative marginal cost.
  - Coherence between Belgian requirements and requirements in other countries in CE should be taken into account once information is known.
  - Ancillary services should be procured via market based mechanisms but the necessary functional capabilities should be requested to ensure a secure power system and to protect the power system from failure of the market response. Additional requirements present in ancillary contract should be independent from type.
  - In line with the NC RfG, active power should be used as a threshold and not apparent power.
  - It is to be recalled that, concerning the capability to modulate the active power output (including in the case of frequency control), the requirements of NC RfG shall not apply CHP of type A, B & C and where heat demand is strong linked to an industrial process and where heat and electricity are strongly linked (see Article 6(4) for details).
  - The cases of a substantial modernization of existing units should be analyzed carefully .
  - This is a first step of the process. Finalization of thresholds will be conducted after the completion of the other topics. The non-binding guidance documents of ENTSO-e will support this approach.

Working proposal taking into account arguments from stakeholders (2/6)

- **The limit A/B [at 250kW] with the following points of attention**
  - LVRT (Low Voltage Ride Through) capability is needed to ensure system robustness to faults. However, the requested LVRT profile for type B units should take into account the fact that:
    - Some units have low inertia and when connected to grids having low short-circuit power, these units could have difficulties to meet a stringent (i.e. long and deep) fault-ride-through profiles.
    - Stringent fault-ride-through profiles then could lead to additional costs for the some units owner.
  - Capability to remote control new type B units is needed to manage DSO grids and to meet the NC DCC requirements at the T/D interface.
  - Observability of type B units (new and existing) is needed. However, while implementing the requirements related to Operational Security, unjustified retroactive cost should be avoided for existing users.
  - “Identified Significant Grid Users” in the context of the NC E&R should be carefully selected taking into account cost of redundant communication channels.

Working proposal taking into account arguments from stakeholders (3/6)

- **Limit B/C [at 25MW] with the following points of attention**
  - Taking into account the fact that, for SPGM, the aggregated installed capacities per site will not be considered to categorize units in type A/B/C/D (except in the case of indivisible set of installations), the threshold for type C, imposing very similar requirements as the existing requirements for “regulating units” (25MW in the Belgian Technical Reglement) may be needed to be set at a lower value than 25MW.
  - Reliability of voltage control is of major importance when largely used. For this reason, it is to be considered that type C units to also comply with the type D requirements related to AVR, PSS, OEL, UEL. This is inline with current practices in BE and should be further investigated in topic on voltage control.
  - Therefore, further topics should take into account the possibility to maintain or slightly adapt (reduce or increase) the value for this threshold if needed. The main topics of attention are
    - Synthetic inertia, if requested, has an impact on PPM’s costs and could become a driver for increasing the threshold between type B/C.
    - Voltage control, Compliance verification by simulation and eventually tests are of major importance to securely operate the power system and could become a driver for reducing the threshold between type B/C.

Working proposal taking into account arguments from stakeholders (4/6)

- **Limit C/D [at 75MW or at 25MW for units connected above 110kV] with the following points of attention**
  - For large PGMs and for units connected to the EHV grid, Fault Ride Through is of major importance for the stability of the grid. The main argument for the NC's-"110kV categorization" is the electrical proximities between each of these units (including units connected to neighboring grids)
  - However, it is proposed to derogate from the NC RfG (which states that all units connected above 110kV should be of type D)
    - Small units of size similar to type A & B and connected within an industrial grids at a voltage below 110kV but for which the industrial grid is connected to the transmission system above 110kV should not be considered as of type D even though their connection point is above 110kV to avoid a potentially high cost burden for these units.
    - Units of size similar to type C when connected above 110kV should remain type D as requested by the NC RfG. This requirement is realistic as, in relation to FRT, the stability of these units is eased by the high short-circuit power ratio and by the fact the FRT profile is defined at the connection point.

Working proposal taking into account arguments from stakeholders (5/6)

- **The T/D interface is considered at the existing border between Elia and the distribution systems (including Transmission-connected CDS).**
  - This limit will need to be confirmed by the topics dealing with the requirements at the T/D interface.
  - It needs to be emphasis that the requirements for the transmission-connected distribution facilities must take into account specificities of both public and closed distribution systems

Working proposal taking into account arguments from stakeholders (6/6)

- **The following aspects have not been considered for the working proposal:**
  - upper limits foreseen in the NC's: Nothing in the characteristics of the Belgian's power system leads to the straightforward conclusion that the upper limits foreseen in the NC's for the different types of grid users. The Belgian power system is indeed efficiently operated thanks to well balance contribution of all actors to the operating capabilities of the system as a whole.
  - Approach taken by NC's: The NCs are based on connection requirement and operation requirements and proposes range in order to cost-efficiently meet a secure power system over time. Arguments being in conflict with the NC approach should not be considered at this stage of the process.
  - Significant cost increase between types: Cost increase between types are acknowledge but these highly depend on the hypothesis taken (type of unit, strength of the requirement for a given type, standardization of equipment's and certification …). Furthermore, current regulation in Belgium should be used as basis for cost analysis rather that comparison between types.
  - CBA's: The NC's do not foresee the need for CBA's to be conducted when implementing the requirements of the NC's for new users. However, justifications will be provided to support the regulatory approval process.
  - Provision of MVAr from local generation: It needs to be emphasis that these MVArs are needed and are valuable for the power system to control local voltages but also to maintain the reactive power balance of Belgium.

Proposal for categorization of Significant Users

First step of the iterative process

Experts Group - Implementation NCs (session 3)

Jonathan Sprooten

Power System Operation and Security, Elia

25/02/2016