Workshop

"High Penetration of Power Electronic Interfaced Power Sources and the Potential Contribution of Grid Forming Converters"

Grid forming capabilities

ENTSO-E Technical Group on High Penetration

Brussels, 30th of January 2020

Presented by T. Bülo, B. Weise

entsoe

Differentiation of Power Park Module (PPM) or HVDC Converter Systems (HCS) Capabilities

Class 1 PPMs / HCS

- Full frequency operating range
- Full voltage operating range
- Basic reactive controls – e.g. Unity Power Factor
- LFSM-O
- Complies with local power quality requirements (e.g. harmonics / unbalance current)

Class 2 PPMs / HCS

- Fault Ride-Through
- Voltage control – steady state
- Voltage control – dynamics
- Voltage control – at P=0
- FSM
- LFSM-U
- Provides damping
- Fast Fault Current Injection (FFCI; see IGD)

GFC considerations linked to satisfying the system needs
TG HP focus on seven challenge / characteristics during high penetration

Issues / challenges potentially remaining even with Class 2 converter capabilities if PEIPS penetration moves beyond 60% towards 100% of instantaneous power demand

Therefore the focus of the TG HP regarding GF capabilities has been exhausted on:

1. Creating system voltage (does not rely on being provided with firm clean voltage)
2. Contributing to Fault Level (positive and negative phase sequence within first cycle)
3. Contributing to Total System Inertia (limited by energy storage capacity)
4. Supporting system survival to allow effective operation of Low Frequency Demand Disconnection (LFDD) for rare system splits.
5. Acting as a sink to counter harmonics & inter-harmonics in system voltage
6. Acting as a sink to counter unbalance in system voltage
7. Controls acting to prevent adverse control system interactions

Challenge 1: “Create system voltage”

Voltage Source Characteristic

- The PPM or HCS provides a three-phase voltage.
  It does not rely on an externally provided firm clean voltage.

- Within the capability of the source, the voltage is maintained in
  - amplitude
  - frequency
  - phase angle

  independently from a load connected to the source.

- With this, a stand-alone, stable “island-operation” is possible. Load flow is determined by the characteristics of
  - loads and
  - current or power-controlled generators

  connected to the system

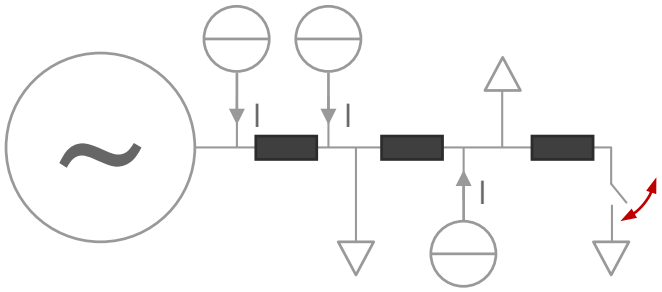

Challenge 1: “Create system voltage”

Parallel Operation Capability

- Due to limited power capability of single generators, in large, interconnected power systems, the system voltage needs to be provided by several generation modules
- Thus, PPMs and HCS need to have the capability to operate in parallel with other AC voltage sources

In order to provide robust power sharing and stable operation, adequate “inherent” mechanisms resulting in stable operating points are preferred rather than relying on external control setpoints (e.g. f(P)-droop)

The resulting operating point may depend on

- load
- capability
- internal control
- optional internal or external control setpoints

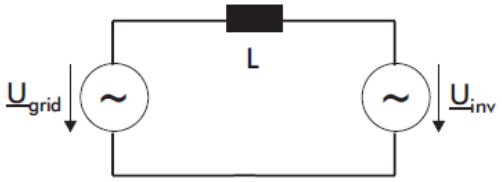

equivalent circuit

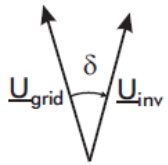

phasor diagram

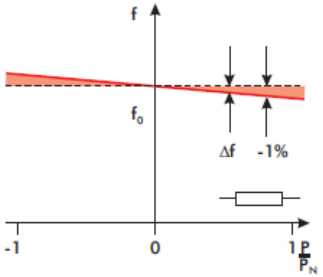

Source: Alfred Engler et. al.: „Droop Control in LV Grids“

Challenge 1: “Create system voltage”

Dynamic Capability

- Ride through and maintain synchronism during transient events like grid faults and load steps in the system
- Capability to supply linear and nonlinear loads of active and reactive power with a supply voltage of commonly accepted quality (specify e.g. THD_U at given THD_I) stationary (this is also linked to challenge „sink for harmonics and unbalance“)
- Transient active and reactive power need / demand resulting from load steps can be fulfilled
- The capability to limit and control the rate of change of voltage angle in transient conditions in order to ensure overall system stability, e.g. following system splits (this is also linked to challenge „Contribution to inertia“)

Challenge 2: Contribute to fault level

Main Objectives:

- Avoid the risk of voltage collapse by limiting the impact of a grid fault (e.g. short circuit on transmission level) on generators and consumers in the wider area of the fault
- The functionality of protection equipment in the grid has to be ensured

Required behaviour of the PPM / HCS:
Contribution to Fault Level

- Positive and Negative Phase Sequence current injection within first cycle (without NPS contribution, performance of transmission distance protection may be suspect) to limit the voltage drop
- Contribution needed also for stable voltage recovery after the fault

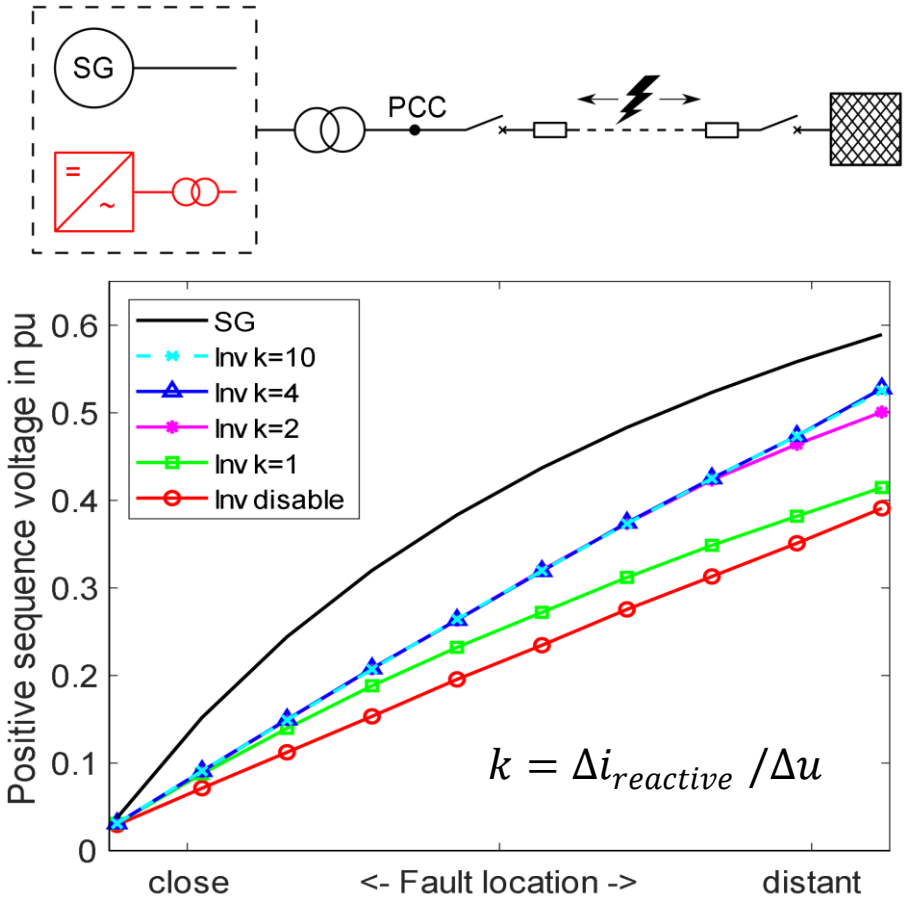

Increase of fault level due to fast fault current injection of a PPM (class 2)

Source: T. Bülo et. al: Next Generation Utility Scale PV- and Storage Systems: New Steps towards a 100% Renewable Generation

Challenge 2: Contribute to fault level

- The voltage source characteristics of a GFC means that it would contribute to the system strength of the power system.
  Main Characteristics:
  - Small Signal impedance
  - Maximum current contribution

- The grid forming converter control (regardless of the technology implementation), behaves as a Thevenin source and impedance, controlled in frequency and in amplitude.

- If current limitation is necessary during voltage drops in the network, two options will be available:
  a) switch over to current control during the fault period in order to limit the current to below the rated current capacity of the converter
  b) implement some current clipping features (done either by HW or SW depending on converter technology)

- A final definition of the desired behaviour is still under discussion

Challenge 3: Contribution to inertia

Objective: Substitute inertia from synchronous machines
Their rotating mass provides inherently stored energy that – in combination with their voltage source characteristic

- counteracts voltage angle, amplitude and frequency perturbations and therefore
  - reduces the rate of change of frequency in case of load steps
  - helps to limit voltage steps by providing a source of active power if needed

Inertial response

- Energy exchanged between the grid and the rotor of an electrical machine in the case of a frequency event
- Characterized by gain and damping factors (H and D)

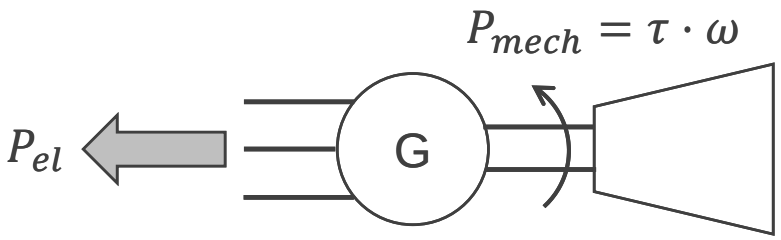

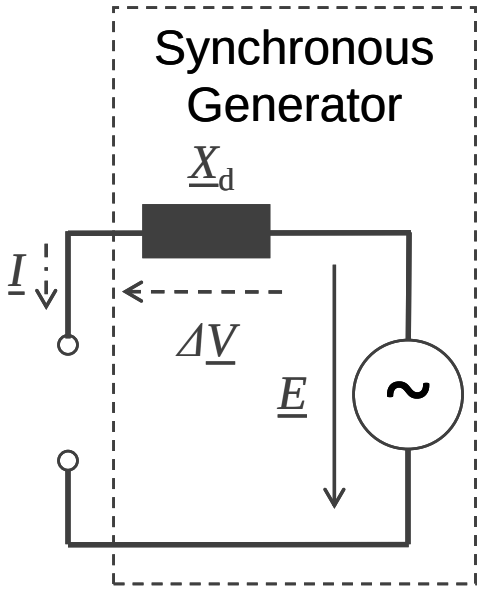

Figures taken from: S. Laudahn et.al: Substitution of Synchronous Generator Based Instantaneous Frequency Control Utilizing Inverter coupled DER

Challenge 3: Contribution to inertia – Basics (SG)

Inertia (derived from Synchronous Generators)

- Provide active power response to voltage phase disturbance
  - Allow power system to dynamically exchange active power with unit
  - Help stabilize frequency
- Fundamental response 2nd order transfer function
  - Defined by H and D (or ω_n and ζ)
- For synchronous machine comprised of two responses
  - $P \propto \Delta\delta$ and $P \propto \Delta f$
- For converters, a common "language", independent from mechanical characteristics of a SM is needed

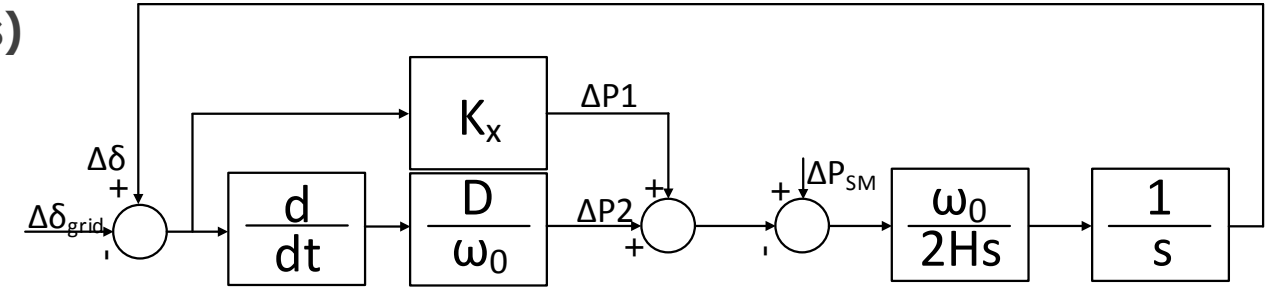

H is the inertia constant
ΔP_{SM} is the synchronous machine mechanical power
D is the damping constant
$\Delta\delta$ is the load angle of the SM
ζ is the damping ratio (if the system is converted into a standard 2nd order transfer function)
s is the Laplace operator
ω_0 is the rated electrical frequency
The term K_x or synchronising torque constant for the operating point

Challenge 3: Contribution to inertia

Inertia provided by GFCs could be:

- specified / designed to be similar to synchronous machines
- chosen (by the TSO) to be substantially different by giving greater emphasis on damping

From the manufacturers point of view

- important for a generic inertial characteristic to emerge that can be fine-tuned for specific system needs.
- in future it could be possible to vary the inertial and damping gains based on varying grid needs.

General considerations on inertial response from PEIPS:

- Energy for inertial response may be taken from
  - rotating mechanical structures
  - headroom created for PV
  - energy storage system
- This depends on expected firmness of the response, and the acceptance of a suboptimal operating point resulting e.g. in a lower power in-feed after the response

Challenge 3: Contribution to inertia - Converter

- Converter is balancing power across DC link
- Inertial response is disturbance to power balance
- Grid forming converter control is only frontend
  - needs backed up by suitable source of power (elec. storage, plant, headroom, …)!
  - Otherwise, DC link will collapse

Normal operation: $P_{net}=P^*_{conv}=P_{dc}$
Inertial response: $P_{net}=P^*_{conv}+P_{Disturb}=P_{dc}+P_{Refill}$

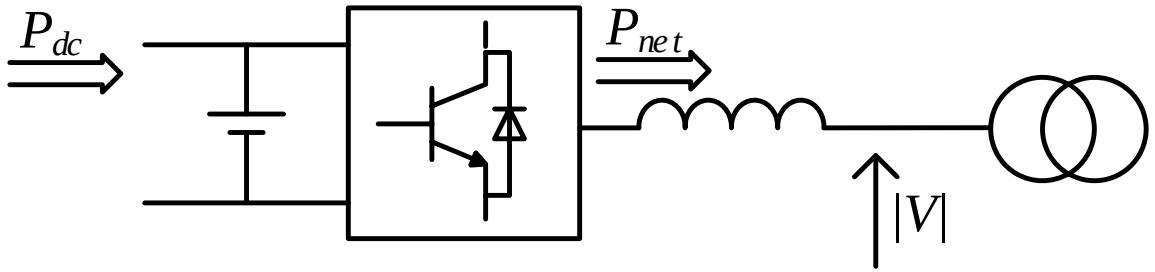

Challenge 3: Contribution to inertia – Converter Response

- Power response depends on definitions
  - H: amplitude of response
  - ζ: speed and oscillatory level of response
  - Model damping vs. exchanging damping power with AC system
- Low bandwidth voltage phasor can only deliver $P \propto \theta$
  - $P \propto \Delta f$ requires high bandwidth response
- Need for commonly agreed definitions (not country specific!)
  - Response defined by core characteristics of grid forming control

Major challenge: defining performance indicators for the inertial contribution of converters:
Allow for different reference values due to different system needs without specifying the actual control implementation!

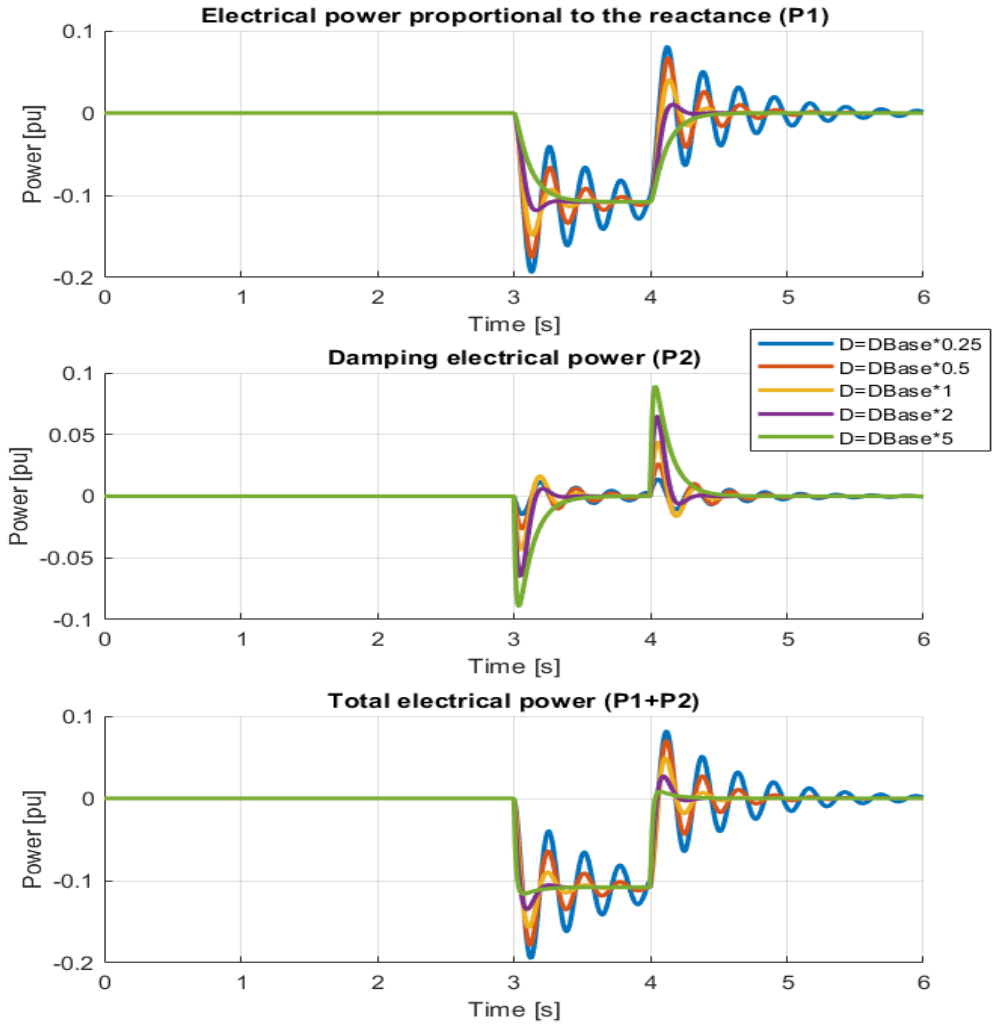

Challenge 4: System survival to allow effective LFDD

Background:

- Challenges of extremely rare low system frequency situations
- Load Frequency Demand Disconnection (LFDD) as a last resort

Experience

- LFDD has been effective to contain major sudden generation/demand unbalances
- e.g. stage 1 (of many) has been enough for recovery for two cases
  - Central Europe three way split 4 Nov 2006
  - In GB 9 August 2019 near simultaneous loss of two large generation sources + embedded LOM trips

Challenge

- LFDD shall be applicable even in case of high penetration of PEIPS

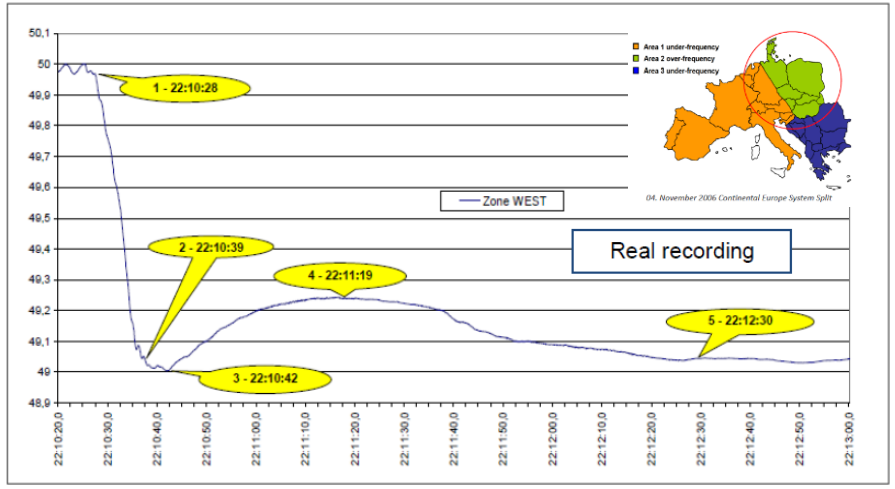

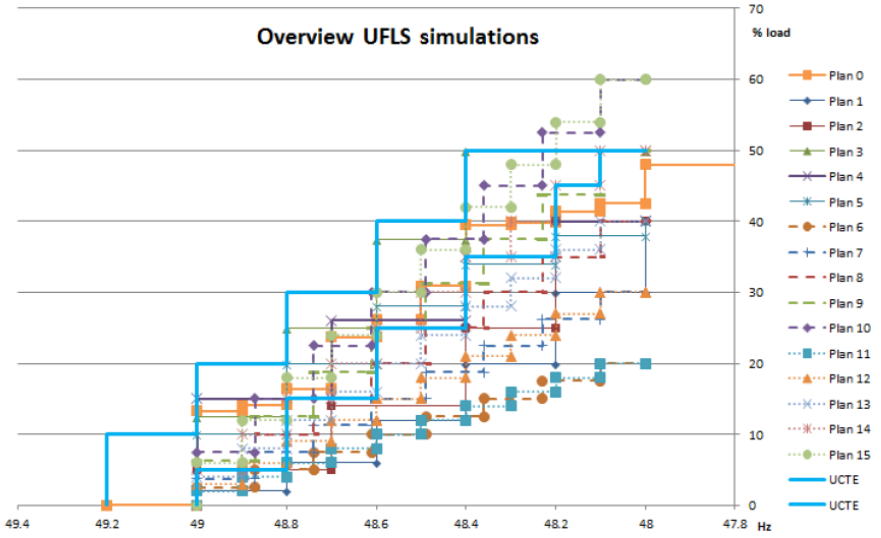

Entso-e:"Technical background for the Low Frequency Demand Disconnection requirements" / "A European View on Grid Forming Inverters and Network Codes"

Challenge 4: System survival to allow effective LFDD

Problem

- After a system split, islands may consist close to 100% of PEIPS with no synchronous generators and therefore in principle very limited system strength
- preliminary analysis shows a risk of near instant system collapse (say <200ms), prior to LFDD operation.

Needed Characteristics and potential effect

- Contribution to system strength and voltage, frequency and angle stability following a sudden load change event (e.g. system split)
- Operating as a voltage source behind an impedance
- Currents are determined by the network and loads and not the converter control systems
- Studies have shown that even when operating a system close to 100% PEIPS and experiencing system splits with very large % imbalance, the system can avoid collapse, if system strength is delivered by applying adequate volume of well designed GFCs (order of 25%).

Required Characteristics have to be defined in further detail as there is a link to voltage source behaviour and contribution to inertia

Challenge 5/6: Sink for harmonics and unbalance

Main Objective
Keep existing level of power quality (voltage quality) using harmonic and unbalanced current flow

Synchronous machines today provide a low impedance to harmonics and unbalance.
Damping is provided through the resistive properties of other components.

Approach / Characteristics of the GFC
- Provide a passive, damping response in the harmonic frequency range
- Provide low negative phase sequence (NPS) impedance

The characteristic could be either:
- mainly inductive, similar to a synchronous machine
- inductive-resistive, providing potentially superior performance to a synchronous machine

Implications
Additional harmonics / unbalanced current flow is an additional load on the converter
and needs to be considered in design

Challenge 5/6: Sink for harmonics and unbalance

Considerations

- Sharing of current headroom, e.g.:
  - Power quality prioritized in steady-state
  - Under dynamic disturbances, giving harmonics lower priority than FRT or frequency support
  - NPS impedance of importance related to unsymmetrical faults
- Frequency range needs to be defined
  - Reduce voltage harmonic content at POC by providing a current path for non-fundamental frequencies up to a limit of e.g. 2 kHz.
- Performance stands in contrast to grid code requirements to-date
  - These typically focus on harmonic current content rather than on voltage harmonics.
  - Further investigation and design of the desired behaviour is needed

Challenge 7: Prevent adverse control interactions

Phenomenon

When a power converter is connected to the electrical grid, the overall network resonances vary because of

- the connection of the converter passive components and,
- the impact of the converter's active behaviour.

Interaction between network resonance and active behaviour of converter is characterised by

- natural frequencies of the network and
- damping provided by network, other generators, loads and the converter

If converter presents negative resistance behaviour in this frequency range and network does not provide sufficient damping, instability may result.

Interactions of converter controllers with other converter controllers in the network are possible as well.

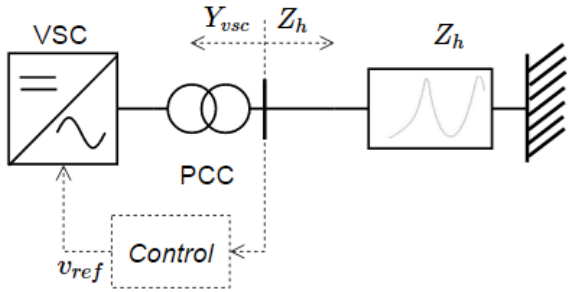

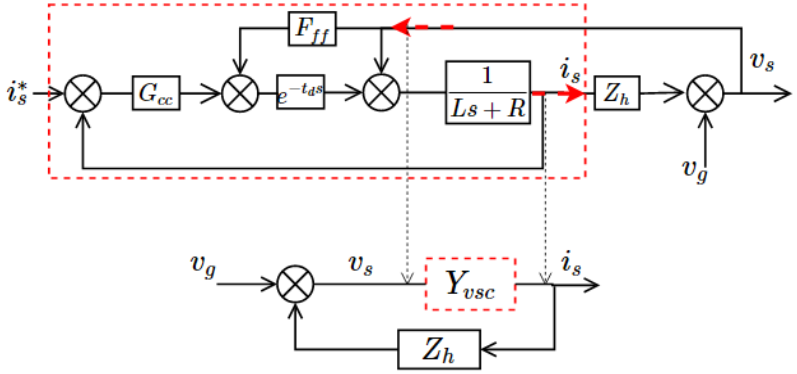

Figures taken from Cigré WG B4.67 Technical Brochure 754, "AC side harmonics and appropriate harmonic limits for VSC HVDC", Feb. 2019

Challenge 7: Prevent adverse control interactions

Terms

- Harmonic stability/instability
- Super-synchronous instability
- Sub-synchronous control interactions

Besides the extreme case of instability, sustained (typically interharmonic) oscillations for several seconds (minutes) with corresponding over-voltages may occur.

Phenomenon relates to small signal disturbance in a wide frequency range.

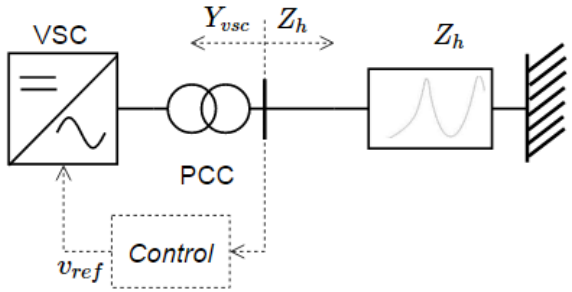

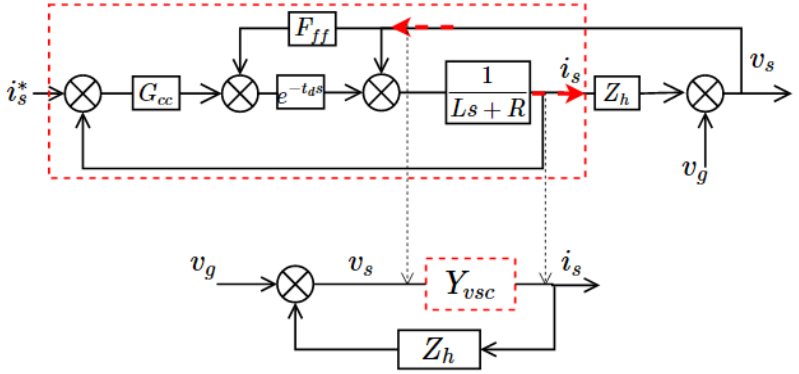

Figures taken from Cigré WG B4.67 Technical Brochure 754, "AC side harmonics and appropriate harmonic limits for VSC HVDC", Feb. 2019

Challenge 7: Prevent adverse control interactions

Performance
Energy storage in a converter is smaller compared to synchronous machine (inertia).
Power control loops of a converter need to be faster for its protective (survival) and own stability purposes.
This results in a broader control bandwidth.

Different view points:

a) A general specification, which avoids control interaction and resulting harmonic over-voltages in any situation, might be very conservative and impossible to fulfil.

b) A frequency bandwidth limitation (5 Hz to 1 kHz) over which GFC controls should exhibit a Thevenin source behind an impedance type behaviour is advocated, in order to ensure stability for varying network topology over time and varying connection of generation.

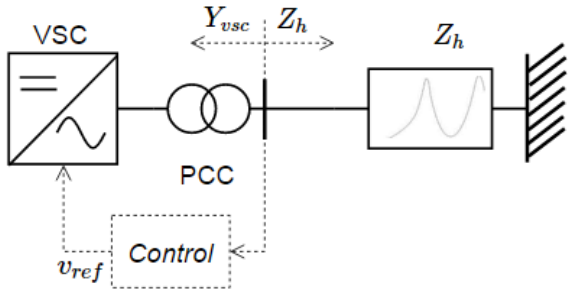

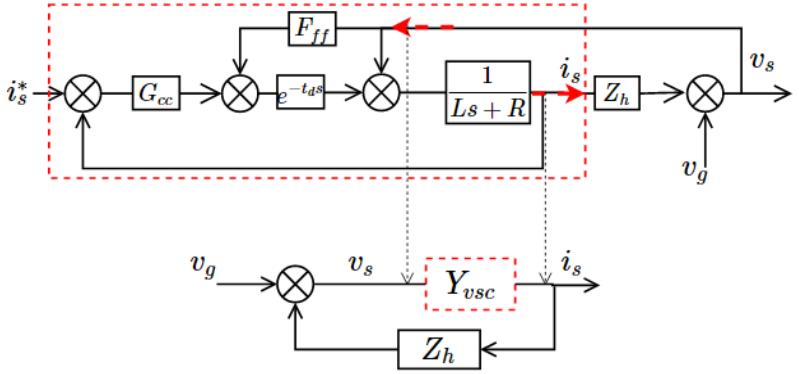

Figures taken from Cigré WG B4.67 Technical Brochure 754, "AC side harmonics and appropriate harmonic limits for VSC HVDC", Feb. 2019

Challenge 7: Prevent adverse control interactions

Study

Analysis of systems (with different system sizes):

- Real-time simulation (HIL or SIL)
- EMT-simulation (no real-time required)
  with validated models or even firmware (DLL, SIL)
- RMS-simulation (dynamic phasor representation),
  as long as the effects to be analysed are controllers possibly oscillating against other controllers, not against passive network components
- Impedance-based stability analysis
- Small-signal stability analysis

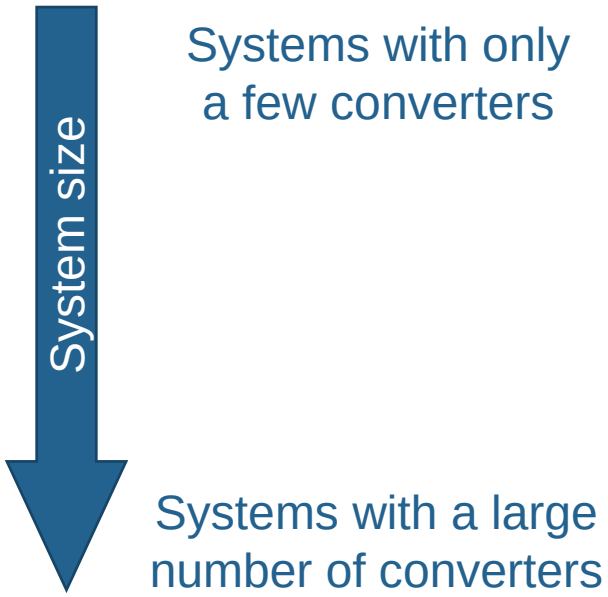

Challenge 7: Prevent adverse control interactions

Testing Procedure

- Testing procedure suggested as standardised for railway supply system
- For large transmission/distribution grids with many stakeholders and large number of different converter types and sizes, simplification of testing procedure is needed:
  - Grouping of typical power system characteristics
  - Standard acceptance criteria
  - Standard test plans

→ Equipment classes

TSOs may increasingly be seeking for control solutions giving greater inherent continued stable operation under a wide range of conditions.
GFC may contribute to build confidence in compatibility over much wider range of conditions.

System aspects and further approaches

Must-Run Units

- Power sources running without being in merit commercially, obliged to stay connected with the sole purpose to provide capabilities described before
- Some countries: rule base (minimum number of synchronous units running for system strength / stability reasons)
- Some countries: market for auxiliary services
- Combined heat and power may continue to run because of demand for heat

Synchronous Compensators / (Condensers (SCs)

- SCs can enhance the system strength
- Redundant synchronous generators could be converted to SCs
- New planned synchronous generators could be equipped with clutches to enable isolation from mechanical prime mover
- Installation of flywheel systems to SCs to increase voltage and inertia support capability

System aspects and further approaches

Spatial Distribution of Grid Forming Units or Must-Run Units

Studies highlight the need for:

- Spatial distribution as equally as possible across the power system's area
- Spatial distribution required in context of retaining stability on occurrence of very large angular jumps, e.g. due to system splits, as well as for PEIPS to survive close to severe fault events
- Locations of next disturbances are not predictable
- Electric distance between location of disturbance and the SGs/SCs/GFs should be rather small in order to ensure beneficial contribution
- SGs/SCs/GFs are less valuable in context of avoiding transmission collapse, if the PPM is connected at medium or low voltage levels
- If equal distribution is not possible, SGs/SCs/GFs should be connected rather in the centre of a network (resulting in similar average distance to disturbances)
- In smaller power systems (island systems, micro grids) the spatial distribution is of less relevance, compared to medium-sized or large power systems

Thank you

Presentation prepared by:

Thorsten Bülo
(SMA Solar Technology AG)

Bernd Weise
(DIgSILENT GmbH)

Helge Urdal,
(Urdal Power Solutions Ltd.)

Thyge Knueppel
(Siemens Gamesa)

Based on the work of the authors of the report

„High Penetration of Power Electronic Interfaced Power Sources and the Potential Contribution of Grid Forming Converters"

by the ENTSO-E TG on High Penetration